Ethernet/IP / ProfiNet Adapter - 8 Port IO-Link Master

XZIOM8AM12PY
ProfiNet

XZIOM8AM12EY
Ethernet/IP

IO-Link

http://qr.tesensors.com/IO0001

Scan the code to access this Instruction Sheet and all product information in different languages or you can visit our website at:
www.telemecaniquesensors.com

We welcome your comments about this document. You can reach us through the customer support page on your local website.

DANGER

HAZARD OF ELECTRIC SHOCK, EXPLOSION OR ARC FLASH

- Disconnect all power before servicing equipment.
- Do not connect this device to AC power.
- The power voltage must not exceed the rated range.
- Do not invert polarity of the power voltage.
- Operate the device only with 24 Vdc PELV (Protective Extra Low Voltage) or SELV (Safety Extra Low Voltage) voltage sources.
- The current limit in a load circuit must not exceed 16 A.
- The current limit at a single IO-Link connector must not exceed 4 A.

Failure to follow these instructions will result in death or serious injury.

WARNING

IMPROPER SETUP OR INSTALLATION

- This equipment must only be installed and serviced by qualified personnel.
- Read, understand, and follow the compliance below, before installing the device.
- Do not tamper with or make alterations on the device.
- Comply with the wiring and mounting instructions.
- Check the connections and fastening during maintenance operations.
- The proper functioning of the device and its operating line must be checked regularly and according to the application (for example number of operations, level of environmental pollution, etc.).
- Observe the relevant standards and guidelines for installations according to EMC.
- You must follow the environement operating characterisitcs listed into this document.

Failure to follow these instructions can result in death, serious injury, or equipment damage.

Device Description

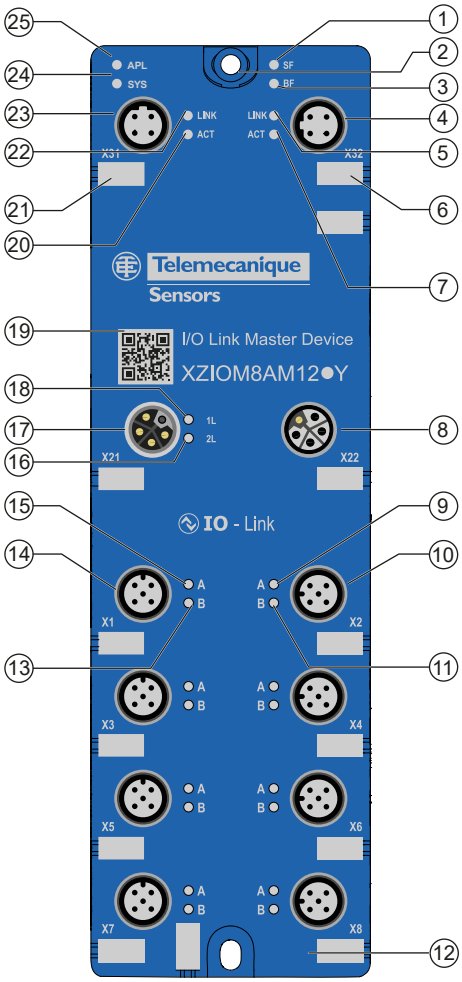

	Name	Description		
		XZIOM8AM12EY Ethernet/IP	XZIOM8AM12PY ProfiNet	
1	MS	Module status LED	SF	PROFINET, system error LED
2	-	Fixing hole and ground (FE)	-	Fixing hole and ground (FE)
3	NS	Network status LED	BF	PROFINET, bus failure LED
4	X32	Ethernet interface, M12, D coded, port 2		
5	LINK	Link LED X32		
6	-	Labeling field		
7	ACT	Activity LED X32		
8	X22	Power Out		
9	A	IO-Link status LED, port 2, channel A		
10	X2	IO-Link, port 2, M12, A coded		
11	B	IO-Link status LED, port 2, channel B		
12	-	Fixing hole		
13	B	IO-Link status LED, port 1, channel B		
14	X1	IO-Link, port 1, M12, A coded		
15	A	IO-Link status LED, port 1, channel A		
16	2L	+24 Vdc power supply status LED, 2L		
17	X21	Power In		
18	1L	+24 Vdc power supply status LED, 1L		
19	-	2D code		
20	ACT	Activity LED X31		
21	-	Labeling field		
22	LINK	Link LED X31		
23	X31	Ethernet interface, M12, D coded, port 1		
24	APL	Application status LED		
25	SYS	System status LED		

Our product should be installed, operated and maintained only by qualified personnel. Neither TMSS France nor any of its subsidiaries or other affiliated companies shall be responsible or liable for any consequences arising out of the use of this material. Telemecanique™ Sensors is a trademark of Schneider Electric Industries SAS used under license by TMSS France. Any other brands or trademarks referred to in this document are property of TMSS France or, as the case may be, of its subsidiaries or other affiliated companies. All other brands are trademarks of their respective owners.

© 2025 TMSS France. “All Rights Reserved.”

Dimensions

mm / in.

1 mm = *0.0394 in.*

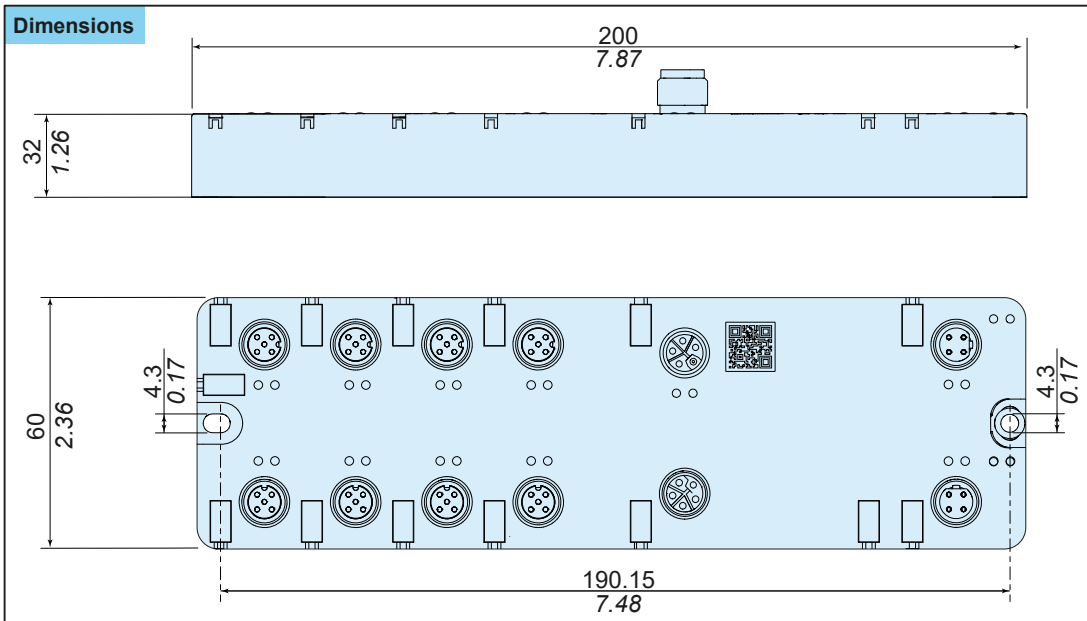

Wiring diagrams

Power supply

Supply voltage input	Supply voltage output	Pin	Signal	Wire color	Description
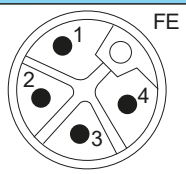 M12, L-coded, plug, 5- pin (4 + FE)	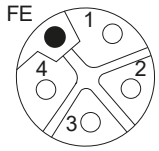 M12, L-coded, socket, 5- pin (4 + FE)	1	1L+	Brown	24 V DC supply voltage U_{1L} for system and sensor/actuator
		2	2L-	White	Reference potential for 2L
		3	1L-	Blue	Reference potential for 1L
		4	2L+	Black	24 V DC auxiliary/control voltage U_{2L}
		FE	FE	Pink	Functional earth

Communication

Ethernet	Pin	Signal	Description
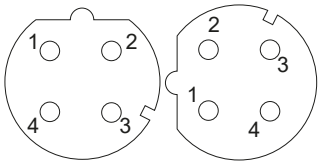 M12, D-coded, socket, 4-pin	1	TX+	Transmit data positive
	2	RX+	Receive data positive
	3	TX-	Transmit data negative
	4	RX-	Receive data negative

IO-Link ports (Class A)

IO-Link ports (Class A)	Pin	Signal	Description	Wire color
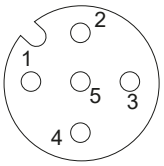 M12, A coded, female, 5-pin	1	1L+	+24 V DC supply voltage U_{1L} for sensor/actuator	Brown
	2	DIO B (DI B/DQ B)	Digital input/output channel B	White
	3	1L–	Ground for 1L+	Blue
	4	C/Q DIO A (DI A/DQ A)	IO-Link data or Digital input/output channel A	Black
	5	n.c.	Not connected	-

IO-Link sensor wiring example (Class A)

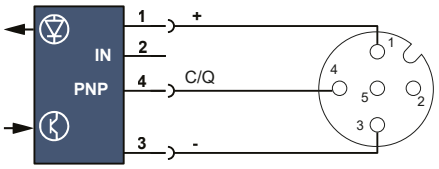

Mounting, wiring and maintenance precautions

NOTICE
REDUCTION OF SERVICE LIFE
Unused port must have a cap.
Failure to follow these instructions can result in equipment damage.

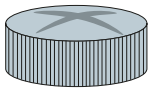

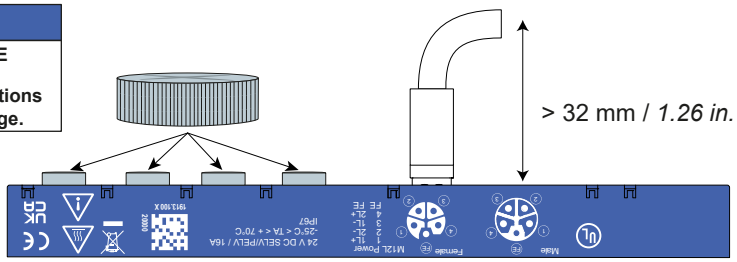

NOTICE
REDUCTION OF SERVICE LIFE
Do not pull on the sensor cable.
Failure to follow these instructions can result in equipment damage.

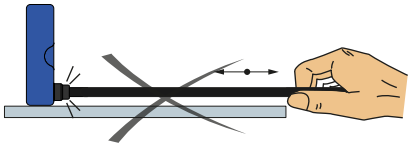

Curves

Derating

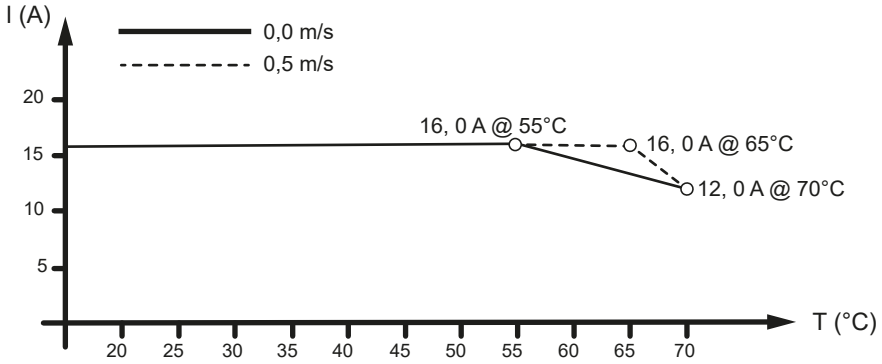

Cables

Cable for I/O devices

Jumper
M12 - 4-pin plug
M8 - 4-pin socket
XZCR2711037T1 1m PUR
XZCR2711037T2 2m PUR

Power cables

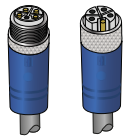

XZCPK75DL2	Single-Ended Pre-wired, L-Coded Power cable, Female, straight, 5-Pin(4+FE), PUR, 1.5 mm², 2 m
XZCPK75DL5	Single-Ended Pre-wired, L-Coded Power cable, Female, straight, 5-Pin(4+FE), PUR, 1.5 mm², 5 m
XZCPK75CL2	Single-Ended Pre-wired, L-Coded Power cable, Female, elbowed, 5-Pin(4+FE), PUR, 1.5 mm², 2 m
XZCPK75CL5	Single-Ended Pre-wired, L-Coded Power cable, Female, elbowed, 5-Pin(4+FE), PUR, 1.5 mm², 5 m
XZCR25K25DL2	Jumper Power cable, Male straight M12 5 pin, Female straight M12 5 pin, PUR, 1.5 mm², 2 m
XZCR25K25DL5	Jumper Power cable, Male straight M12 5 pin, Female straight M12 5 pin, PUR, 1.5 mm², 5 m
XZCR26K26CL2	Jumper Power cable, Male elbowed M12 5 pin, Female elbowed M12 5 pin, PUR, 1.5 mm², 2 m
XZCR26K26CL5	Jumper Power cable, Male elbowed M12 5 pin, Female elbowed M12 5 pin, PUR, 1.5 mm², 5 m

PVC cable for general use
PUR cable for severe industrial environments

Installation

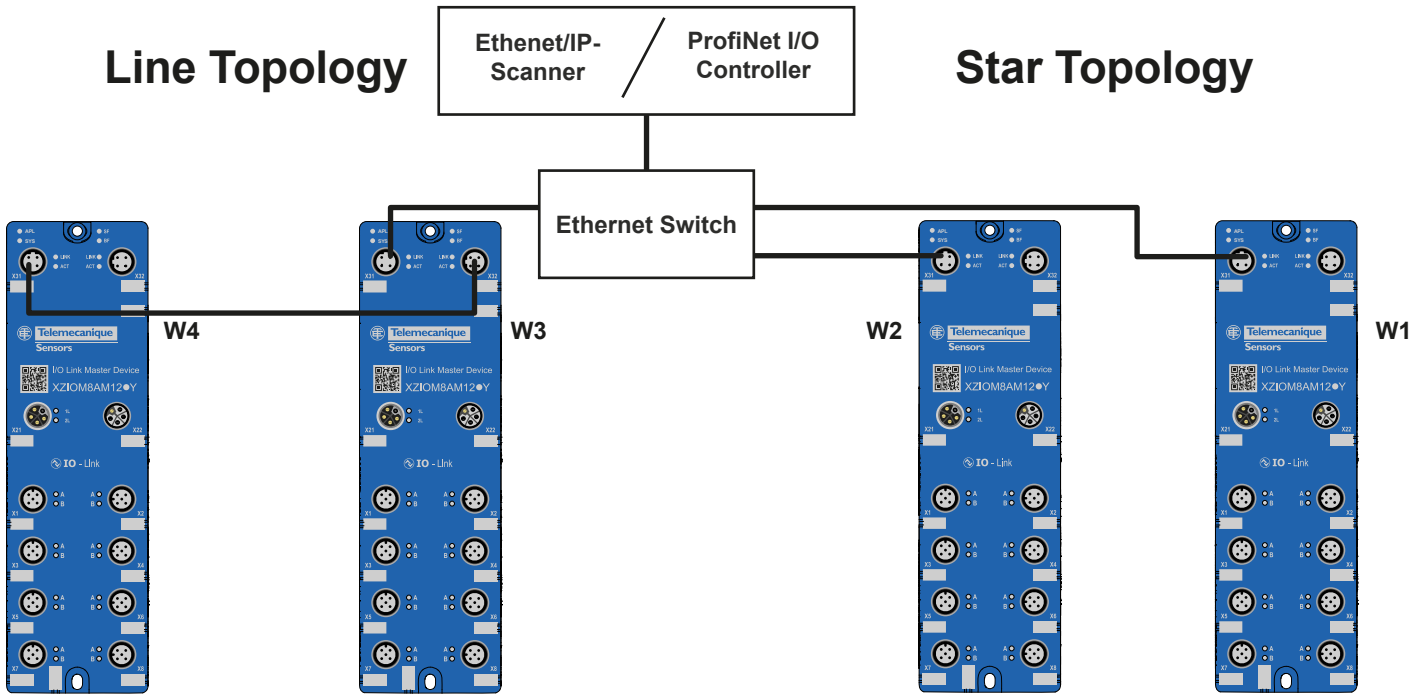

Configuration

Features	Simply Config IO-Link	Web Configurator
Manage IODD files	✓	✗
IODD Finder	✓	✗
Port Diagnosis: Current Monitoring	✗	✓
Ports Diagnosis: Voltage Monitoring	✗	✓
Ports Diagnosis: Temperature Monitoring	✗	✓
User Administration	✗	✓
Device parameter Configuration	✓	✓
Maintenance Information	✓	✓
IO-Link master - Device Configuration	✓	✓
Firmware Update	✓	✓
Factory reset	✓	✓
MQTT Configuration settings	✓	✓
IO-Link Master Diagnosis: Current Monitoring	✗	✓
IO-Link Master Diagnosis: Voltage Monitoring	✗	✓
IO-Link Master Diagnosis: Temperature Monitoring	✗	✓

Diagnosis via LEDs

1L and 2L Supply voltage status

LED	Color	State	Meaning
1L (18)	**Duo-LED red/green**		
	(green)	On	1L Supply voltage OK (18...30V)
	(red)	On	1L undervoltage (11...18V)
	(red)	Flashing (4 Hz)	1L overvoltage (>30V)
	(off)	Off	No 1L Supply voltage (>11V)
2L (16)	**Duo-LED red/green**		
	(green)	On	2L Supply voltage OK (18...30V)
	(red)	On	2L undervoltage (11...18V)
	(red)	Flashing (4 Hz)	2L overvoltage (>30V)
	(off)	Off	No 2L Supply voltage (>11V)

System status

LED	Color	State	Meaning
SYS (24)	**DUO-LED**		
	(green)	On	Firmware is running. System status: OK
	(yellow)	On	Error
	(yellow) (green)	Flashing (4 Hz)	Firmware update active
	(off)	Off	No power supply

Application status

LED	Color	State	Meaning
APL (23)	**DUO-LED red and green similtaneously**		
	(green)	On	Firmware is running, normal operating state
	(green)	Flashing (4 Hz)	Used for device identification (via web server or OPC UA connection)
	(yellow)	On	Initialization error (e.g. hardware error, missing valid no COM firmware found)
	(red)	On	Critical oerating state: Overtemperature or self-protection is active
	(off)	Off	Firmware is not running

IO-Link channels A and B port status port 1 (15) (13) port 2 (9) (11)

LED	Color	State	Description
IO-Link, channel A Status pin 4 IO-Link	**Duo-LED yellow/red/green (yellow by red and green simultaneously)**		
	(yellow)	On	Status of digital input pin 4: On
	(off)	Off	Status of digital input pin 4: Off
	(green)	On	IO-Link communication active
	(green)	Blinking 1Hz	No IO-Link device connected to the port or no IO-Link communication to the connected IO-Link device
	(green)	Blinking 4Hz	IO-Link device ready for communication but IO-Link communication not yet active or check of revision or of the IO-Link device failed
	(red)	On	Overload, short circuit (pin 4 and pin 3)
	(red)	Blinking 1Hz	Overload, short circuit sensor supply 1L+, 1L- (pin 1 and pin 3)
IO-Link, channel B Status pin 2 DIO	**Duo-LED yellow/red (yellow by red and green simultaneously)**		
	(yellow)	On	Status of digital input pin 2: On
	(off)	Off	Status of digital input pin 2: Off
	(red)	On	Overload, short circuit (pin 2 and pin 3)
	(red)	Blinking 1Hz	Overload, short circuit sensor supply 1L+, 1L- (pin 1 and pin 3)

IO-Link master status

EtherNet/IP Adapter Status:

LED	Color	Status	Description
MS (1) (Module status)	**Duo-LED red/green**		
	(green)	On	**Device operational:** The device is operation correctly.
	(green)	Flashing (1 Hz)	**Standby:** The device has not been configured.
	(red/green)	Flashing (1 Hz) red/green	**Self-test:** The device performs a self-test after power-on.
	(red)	Flashing (1 Hz)	**Major recoverable fault:** The device has detected a major recoverable fault. E.g., an incorrect or inconsistent configuration can be considered a major recoverable fault.
	(red)	On	**Major unrecoverable fault:** The device has detected a unrecoverable fault.
	(off)	Off	**No power:** The device is powered off.
NS (3) (Network status)	**Duo-LED red/green**		
	(green)	On	**Connected:** An IP adress is configured, at least on CIP connection is established.
	(green)	Flashing (1 Hz)	**No connection:** An IPadress is configured, but no CIP connections have been established.
	(red/green)	Flashing fast red/of	**Self-test:** The device performs a self-test after power-on.
	(red)	Flashing (1 Hz)	**Connection timeout:** One or more of the connections that this device is target have timed out.
	(red)	On	**Duplicate IP:** The device has detected that its IP adress is already in use.
	(off)	Off	**Not powered, no IP adress:** The device does not have an IP address (or is powered off).

ProfiNet Adapter Status:

LED	Color	Status	Description
SF (1) (System Failure)	**Duo-LED red/green**		
	(red)	Flashing (1 Hz, 3 s)	DCP signal service is initiated via the bus.
	(red)	On	Watchdog timeout; channel, generic or extended diagnosis present; system error
	(off)	Off	No error
BF (3) (Bus Failure)	**Duo-LED red/green**		
	(red)	Flashing (2 Hz)	No data exchange
	(red)	On	No configuration; or low speed physical link; or no physical link
	(off)	Off	No error

LED	Color	Status	Description
LINK Channel 0 (22) Channel 1 (5)	**LED green**		
	(green)	On	The device is linked to the Ethernet.
	(off)	Off	The device has no link to the Ethernet.
ACT Channel 0 (20) Channel 1 (7)	**LED yellow**		
	(yellow)	Flickering (load dependent)	The device sends/receives Ethernet frames.
	(off)	Off	The device does not send/receive Ethernet frames.

LED status	Definition
Blinking (1 Hz)	The LED turns on and off with a frequency of 1 Hz: "On" for 500 ms, followed by "Off" for 500 ms.
Flashing fast (green/red)	The MS LED or NS LED turns on green "On" for 250 ms, then red "On" for 250 ms, then green "On" (until the test is completed).
Flickering (load dependent)	The LED turns on and off with a frequency of 10 Hz to indicate high Ethernet activity: "On" for 50 ms, followed by "off" for 50 ms. The LED turns on and off in irregular intervals to indicate Ethernet activity.

Product specifications

Category	Parameter	Value	
		XZIOM8AM12EY	XZIOM8AM12PY
Product	Part number	XZIOM8AM12EY	XZIOM8AM12PY
	Function	Ethernet/IP IO-Link Master	ProfiNet IO-Link Master
Power supply 1L, 2L	Supply voltage 1L, 2L	24 V DC, –25%/+30% (18 V DC … 31.2 V DC) Voltages higher than 34 V can damage the device permanently. Voltages below approximatively 11 V result in a device reset.	
	Low voltage warning 1L	18.0 V (± 5% at 25 °C) notification on, 18.3 V (± 5% at 25 °C) notification off	
	Overvoltage warning 1L	30.0 V (± 5% at 25 °C) notification on, 29.7 V (± 5% at 25 °C) notification off	
	Current consumption	1L: 0.1 A ... 16 A (at 24 V DC) 2L: 0.01 A ... 16 A (at 24 V DC)	
	Current consumption of supply port	Max. 16 A, consider external limitation or use fuse in the supply line. Maximum total current including transit between the current connector pins may not exceed 16 A for each 1L and 2L. If additional devices are connected to X32 (PWR OUT), then the maximum total current if necessary has to be monitored by an external power management. Maximum current: Observe the derating depending on the ambient temperature.	
	Conductor cross-section	0.5 mm²… 2.5 mm² Observe the current carrying capacity and cable length	
	Connector	PWR IN: M12 L-coded, 5-pin, plug PWR OUT: M12 L-coded, 5-pin, socket	
	Torque	1.0 Nm	
	Reverse polarity protection	Yes	
	Power Supply	24 V DC PELV (Protective Extra Low voltage) or SELV (Safety Extra Low voltage) power supply	
Total load	Maximum total load current (total of all currents of ports X1 - X8)	15.7 A	

Category	Parameter	Value	
		XZIOM8AM12EY	XZIOM8AM12PY
Device	Dimensions (L x W x H)	200 mm x 60 mm x 32 mm *(7.87 in x 2.36 in x 1.25 in)*	
	Weight	404 g (*0.89 lb*)	
	Housing	Plastic	
	Potting	Solvent-free electro-casting resin system based on 2 K polyurethane	
	Degree of protection	IP67 (EN 60529)	
	Protection class	III (EN 61140)	
	Mounting	Screw mounting on carrier, 2 x M4	
Environmental conditions	Location of operation	Indoor	
	Ambient temperature (operation)	-25 °C … +70 °C (*-13 °F ... +158 °F*)	
	Ambient temperature (storage)	-40 °C … +80 °C (*-40 °F … +176 °F*)	
	Maximum temperature change	3 K / min	
	Relative humidity	5% … 95%	
	Degree of pollution	3 (EN 60664-1)	
	Altitude	0 … 2000 m (*0 … 6561 ft*)	
	Overvoltage category	II (EN 60664-1)	
	Degree of protection	IP67 (EN 60529)	
	Protection class	III (EN 61140)	
Electrical Characteristics	Insulation resistance	60 V DC	
	Test voltage	550 V AC RMS	
	Min. creepage distance	0.7 mm (*0.027 in*)	
Ethernet connector	Communication interface	Ethernet	
	Autonegotiation, autocrossover	Yes	
	Connector	2x M12, D coded, socket, 4-pin	
	Torque	1.0 Nm	
IO-Link connector	Connector	8x M12, A coded, plug, 5-pin	
	Torque	1.0 Nm	
	Operating modes	Pin 2: DI or DO Pin 4: IO-Link Master, DI or DO	
Displays	SYS	System status, green/yellow	
	APL	Application status, red/green	
	MS	Module status (EtherNet/IP), red/green	-
	SF	-	System error (PROFINET), red
	NS	Network status (EtherNet/IP), red/green	-
	BF	-	Bus error (PROFINET), red
	LINK	Link status, green	
	ACT	Activity status, yellow	
	1L, 2L	Supply voltage status, red/green	
	A, B	Port status: red/green/yellow (yellow by simultaneous red and green)	
Compliance	RoHS	Yes	
Compliance with EMC guidelines	CE sign	Yes	
	UKCA sign	Yes	
	Emission	EN 61000-6-4 / BS EN 61000-6-4	
	Immunity	EN 61000-6-2 / BS EN 61000-6-2	

Manufacturer:
TMSS France
Tour Eqho - 2 avenue Gambetta
92400 Courbevoie
France

UK Representative:
Yageo TMSS UK Limited
2 North Park Road
Harrogate, HG1 5PA
United Kingdom