Limit switches XCE and XCJ ranges
Easy Series

Catalogue

Simply easy!™

Telemecanique
Sensors

Contents

Limit switches
XCE and XCJ ranges

■ **General**

- General . . . . . page 2
- Applications examples . . . . . page 2
- Contact blocks operation . . . . . page 3
- Utilization categories IEC 60947-5-1 . . . . . page 4
- Setting up and mounting advice . . . . . page 5
- European standards . . . . . page 6
- American standards . . . . . page 7
- Operating heads selection . . . . . page 8
- Limit switches selection guide . . . . . page 9

■ **XCE limit switches for medium duty applications**

- Presentation and general characteristics . . . . . page 10
- References and complementary characteristics . . . . . pages 11 to 13
- Operating diagrams . . . . . pages 11 to 13
- Dimensions . . . . . pages 11, 14 and 15

■ **XCJ limit switches for light to medium duty applications**

- Presentation and general characteristics . . . . . page 16
- References and complementary characteristics . . . . . pages 17 and 18
- Operating diagrams . . . . . pages 17 and 18
- Dimensions . . . . . pages 17 and 19

■ **Product reference index** . . . . . page 20

Limit switches
XC range

General

Electromechanical detection

Limit switches are used in all automated installations and also in a wide variety of applications, due to the numerous advantages inherent to their technology.
They transmit data to the logic processing system regarding:
- **presence/absence,**
- **passage,**
- **positioning,**
- **end of travel.**

Simple to install switches, offering many advantages

- **From an electrical viewpoint:**
  - galvanic separation of circuits,
  - models suitable for low power switching, combined with good electrical durability,
  - very good short-circuit withstand in coordination with appropriate fuses,
  - total immunity to electromagnetic interference,
  - high rated operational voltage.

- **From a mechanical viewpoint:**
  - N/C contacts with positive opening operation,
  - high resistance to the different ambient conditions encountered in industry,
  - high repeat accuracy, up to 0.01 mm on the tripping points,
  - simple visible operation.

Mechanical endurance

- **Major factors affecting the mechanical endurance of a limit switch:**
  - operating speed and frequency,
  - operating travel (percentage of total travel),
  - cam angle,
  - environnment (presence of abrasive dust, corrosive substances, etc).

Applications examples

Roller plunger

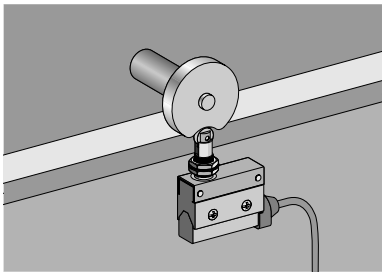

End plunger

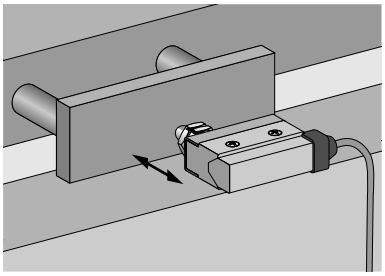

Rotary style head

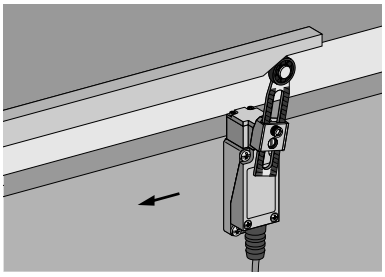

Multidirectional head

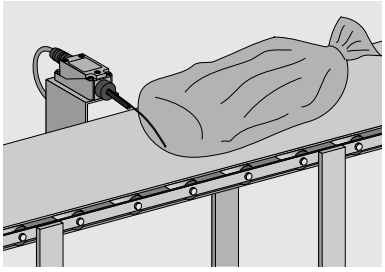

Limit switches

XC range

Contact block operation

Contact blocks operation

Example : 1 N/C + 1 N/O

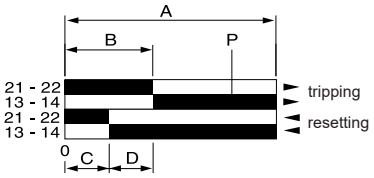

Linear movement (plunger)

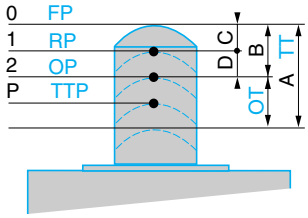

Rotary movement

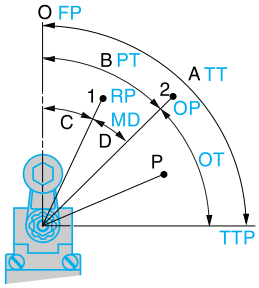

Example : 1 N/C + 1 N/O break before make

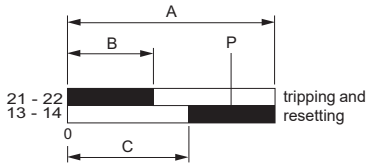

Linear movement (plunger)

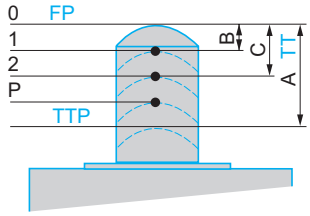

Rotary movement

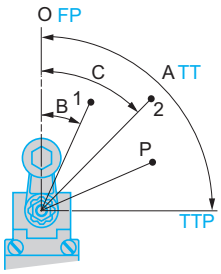

Snap action contacts

■ **Linear movement (plunger)**

European terminology	Terminology according to JIS C 4508
A Maximum travel	**TT** Total travel
B Tripping travel	–
C Resetting travel	–
D Differential travel	–
P Point from which positive opening is assured	–
A-B No specific term	**OT** Over Travel
1 Resetting point	**RP** Release Position
2 Tripping point	**OP** Operation Position
0 No specific term	**FP** Free Position
– No specific term	**TTP** Total Travel Position

■ **Rotary movement**

European terminology	Terminology according to JIS C 4508
A Maximum travel	**TT** Total travel
B Tripping travel	**PT** Pre-Travel
C Resetting travel	–
D Differential travel	**MD** Movement Differential
P Point from which positive opening is assured	–
A-B No specific term	**OT** Over Travel
1 Resetting point	**RP** Release Position
2 Tripping point	**OP** Operation Position
0 No specific term	**FP** Free Position
– No specific term	**TTP** Total Travel Position

Slow break contacts

■ **Linear movement (plunger)**

European terminology	Terminology according to JIS C 4508
A Maximum travel	**TT** Total travel
B Tripping and Resetting travel of N/C contact	–
C Tripping and Resetting travel of N/O contact	–
P Point from which positive opening is assured	–
1 Tripping and Resetting point of N/C contact	–
2 Tripping and Resetting point of N/O contact	–
0 No specific term	**FP** Free Position
– No specific term	**TTP** Total Travel Position

■ **Rotary movement**

European terminology	Terminology according to JIS C 4508
A Maximum travel	**TT** Total travel
B Tripping and Resetting travel of N/C contact	–
C Tripping and Resetting travel of N/O contact	–
P Point from which positive opening is assured	–
1 Tripping and Resetting point of N/C contact	–
2 Tripping and Resetting point of N/O contact	–
0 No specific term	**FP** Free Position
– No specific term	**TTP** Total Travel Position

Limit switches

XC range

Contact ratings

Utilization categories IEC 60947-5-1

Kind of current	Category	Typical application	$T_{0,95}$ (DC) *(1)* cos φ (AC)
Alternating current	AC-12	Control of resistive loads and solid state loads with isolation by opto couplers	0.9
	AC-13	Control of solid state loads with transformer isolation	0.65
	AC-14	Control of small electromagnetic loads (≤ 72 VA)	0.3
	AC-15	Control of electromagnetic loads (> 72 VA)	0.3
Direct current	DC-12	Control of resistive loads and solid state loads with isolation by opto couplers	1 ms
	DC-13	Control of electromagnets	300 ms maximum
	DC-14	Control of electromagnetic loads having economy resistors in circuit	15 ms

(1) $T_{0,95}$ = time to reach 95 % of the steady state current.

Contact rating designation IEC 60947-5-1

Designation	Utilization category	Conventional therm. current	Rated operational current Ie at rated operating voltage Ue					
			120 V	240 V	380 V	480 V	500 V	600 V
A150	AC-15	10 A	6 A	–	–	–	–	–
A300	AC-15	10 A	6 A	3 A	–	–	–	–
A600	AC-15	10 A	6 A	3 A	1.9 A	1.5 A	1.4 A	1.2 A
B150	AC-15	5 A	3 A	–	–	–	–	–
B300	AC-15	5 A	3 A	1.5 A	–	–	–	–
B600	AC-15	5 A	3 A	1.5 A	0.95 A	0.75 A	0.72 A	0.6 A
C150	AC-15	2.5 A	1.5 A	–	–	–	–	–
C300	AC-15	2.5 A	1.5 A	0.75 A	–	–	–	–
C600	AC-15	2.5 A	1.5 A	0.75 A	0.47 A	0.375 A	0.35 A	0.3 A
D150	AC-14	1.0 A	0.6 A	–	–	–	–	–
D300	AC-14	1.0 A	0.6 A	0.3 A	–	–	–	–
E150	AC-14	0.5 A	0.3 A	–	–	–	–	–

Designation	Utilization category	Conventional therm. current	Rated operational current Ie at rated operating voltage Ue				
			125 V	250 V	440 V	500 V	600 V
N150	DC-13	10 A	2.2 A	–	–	–	–
N300	DC-13	10 A	2.2 A	1.1 A	–	–	–
N600	DC-13	10 A	2.2 A	1.1 A	0.63 A	0.55 A	0.4 A
P150	DC-13	5 A	1.1 A	–	–	–	–
P300	DC-13	5 A	1.1 A	0.55 A	–	–	–
P600	DC-13	5 A	1.1 A	0.55 A	0.31 A	0.27 A	0.2 A
Q150	DC-13	2.5 A	0.55 A	–	–	–	–
Q300	DC-13	2.5 A	0.55 A	0.27 A	–	–	–
Q600	DC-13	2.5 A	0.55 A	0.27 A	0.15 A	0.13 A	0.1 A
R150	DC-13	1.0 A	0.22 A	–	–	–	–
R300	DC-13	1.0 A	0.22 A	0.1 A	–	–	–

Limit switches

XC range

Setting up and mounting advice

Setting up

Reverse mounting of the operating lever (for limit switches XCE)

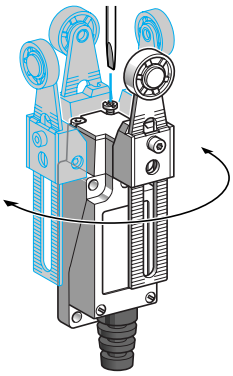

Mounting advice

Sweep of connecting cable

Recommended

To be avoided

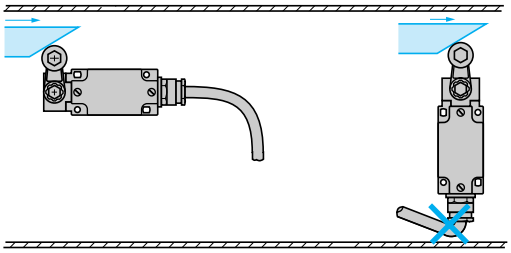

Position of cable-gland

Recommended

To be avoided

Type of cam

Recommended

To be avoided

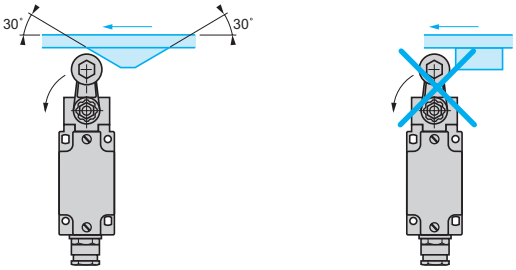

Mounting and fixing of limit switches

XCJ110C, XCJ102C and XCJ103C

Recommended

To be avoided

Limit switches

XC range

Degrees of protection provided by enclosures

European standards

Degrees of protection against the penetration of solid bodies, water and personnel access to live parts

The European standard EN 60529 dated October 1991, IEC publication 529 (2nd edition - November 1989), defines a coding system (IP code) for indicating the degree of protection provided by electrical equipment enclosures against accidental direct contact with live parts and against the ingress of solid foreign objects or water.
This standard does not apply to protection against the risk of explosion or conditions such as humidity, corrosive gasses, fungi or vermin.

IP●● code

- The IP code comprises **2 characteristic numerals** (e.g. **IP 55)**
- Any characteristic numeral which is unspecified is replaced by an X (e.g. IP XX)

1st characteristic numeral: corresponds to **protection of the equipment against penetration of solid objects** and **protection of personnel against direct contact with live parts.**

	Protection of the equipment		Protection of personnel
0	Non-protected		Non-protected
1	Ø 50 mm	Protected against the penetration of solid objects having a diame- ter greater than or equal to 50 mm.	Protected against direct contact with the back of the hand (accidental contacts).
2	Ø 12,5 mm 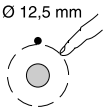	Protected against the pe- netration of solid objects having a diameter greater than or equal to 12.5 mm.	Protected against direct finger contact.
3	Ø 2,5 mm 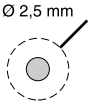	Protected against the penetration of solid objects having a diame-ter greater than or equal to 2.5 mm.	Protected against direct contact with a Ø 2.5 mm tool.
4	Ø 1 mm 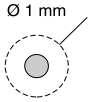	Protected against the penetration of solid objects having a diame- ter > 1 mm.	Protected against direct contact with a Ø 1 mm wire.
5	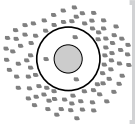	Dust protected (no harmful deposits).	Protected against direct contact with a Ø 1 mm wire.
6	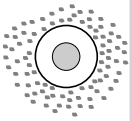	Dust tight.	Protected against direct contact with a Ø 1 mm wire.

2nd characteristic numeral: corresponds to **protection of the equipment against penetration of water with harmful effects.**

0	Non-protected	
1		Protected against vertical dripping water, (condensation)
2	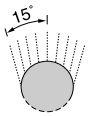	Protected against dripping water at an angle of up to 15°.
3	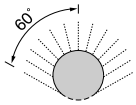	Protected against rain at an angle of up to 60°.
4		Protected against splashing water in all directions.
5	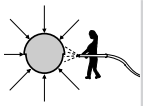	Protected against water jets in all di- rections.
6	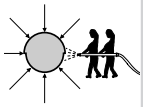	Protected against powerful jets of water and waves.
7	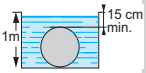	Protected against the effects of temporary immersion.
8	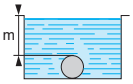	Protected against the effects of prolonged immersion under speci-fied conditions.

Limit switches

XC range

Degrees of protection provided by enclosures

American standards

Standard UL 50 - Table 6.1 - Enclosures types, defines a coding system for indicating the protection provided by electrical equipment enclosures against the ingress of solid foreign objets and fluids.

Type	Intended use and description
1	Indoor use primarily to provide a degree of protection against limited amounts of falling dirt.
2	Indoor use primarily to provide a degree of protection against limited amounts of falling water and dirt.
3	Outdoor use primarily to provide a degree of protection against rain, sleet, wind blown dust and damage from external ice formation.
3R	Outdoor use primarily to provide a degree of protection against rain, sleet, and damage from external ice formation.
3S	Outdoor use primarily to provide a degree of protection against rain, sleet, wind blown dust and provide for operation of external mechanisms when ice laden.
4	Indoor or outdoor use primarily to provide a degree of protection against rain, sleet, wind blown dust and provide for operation of external mechanisms when ice laden.
4X	Indoor or outdoor use primarily to provide a degree of protection against corrosion, wind blown dust and rain, splashing water, hose-directed water, and damage from external ice formation.
5	Indoor use primarily to provide a degree of protection against setting airbone dust, falling dirt, and dripping noncorrosive liquids.
6	Indoor or outdoor use primarily to provide a degree of protection against hose-directed water, and the entry of water during occasional temporary submersion at a limited depth and damage from external ice formation.
6P	Indoor or outdoor use primarily to provide a degree of protection against hose-directed water, the entry of water during prolonged submersion at a limited depth and damage from external ice formation.
12, 12K	Indoor use primarily to provide a degree of protection against limited circulation dust, falling dirt, and dripping noncorrosive liquids.
13	Indoor use primarily to provide a degree of protection against dust, spraying of water, oil and noncorrosive coolant.

Limit switches

XC range
Operating heads

Operating heads selection

5 points to consider…

Direction of operation	Operating speed *(1)*	Positivity *(2)* ⊖	Risk of overtravel damage	Target type
Plunger style				
↓	0.5 m/s	Yes	Very high	■ ↓
→ ←	0.85 m/s	Yes	High	30° →
Lever and roller lever plunger style				
→	0.85 m/s	Yes	Medium	30° →
→ ←	0.85 m/s	Yes	Medium	30° →
→ or ↓	0.5 m/s	No	High	↓ ■ 30°
Rotary style				
CW & CCW (3)	1 m/s	Yes (with non flexible levers only)	Low	30° →
CW & CCW (3)	1 m/s	Yes (with non flexible levers only)	Low	30° →
CW & CCW (3)	1 m/s	Yes (with non flexible levers only)	Low	● →
Multidirectional style				
✱	0.5…1 m/s	No	Lowest	● →
✱	0.5…1 m/s	No	Lowest	● →

(1) These values are indicative only. For precise information relating to a particular device, refer to the appropriate technical characteristics.
(2) Only when combined with a positive opening contact.
(3) CW = clockwise, CCW = counter clockwise.

Limit switches
XC range

Applications	**Medium duty:** small compactors, wood working, metal working, food processing…	**Light duty:** injection moulding, assembly, metal working, packaging…
Enclosure (body)	Zinc alloy (cover: plastic)	Plastic (cover: zinc alloy)
Conforming to standards	IEC 60947-5-1	IEC 60947-5-1
Conformities	CE, CCC	CE, CCC
Body dimensions in mm (w x h x d)	28 x 64 x 25	54 x 42 x 21
Head	Linear, rotary or multi-directional 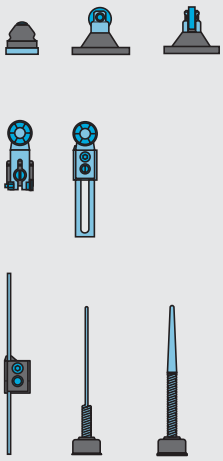	Linear 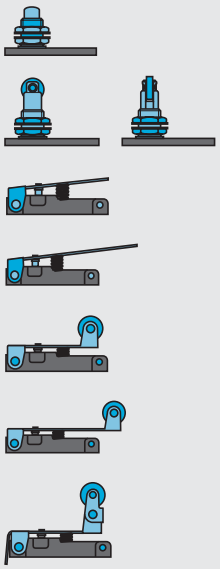
Contact blocks **1 C/O snap action - Form C**	–	●
1 NO + 1NC snap action - Form Za	●	–
Degree of protection	IP 65	IP 40, IK 04
Cabling **Screw terminal**	Flexible rubber cable gland suitable for cable Ø 6…9 mm	Flexible rubber cable gland suitable for cable Ø 8.5…10.5 mm
Pre-cabled	–	–
Connector	–	–
Type references	**XCE**	**XCJ**
Pages	10 to 15	16 to 19

Limit switches

XC range
For medium duty applications, XCE

XCE (1 NO + 1 NC form Za)

With head for linear movement (plunger) operators

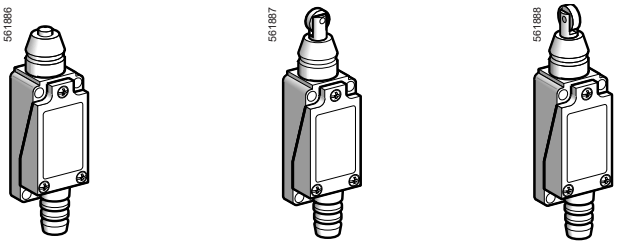

Page 11

With head for rotary movement (lever) operators

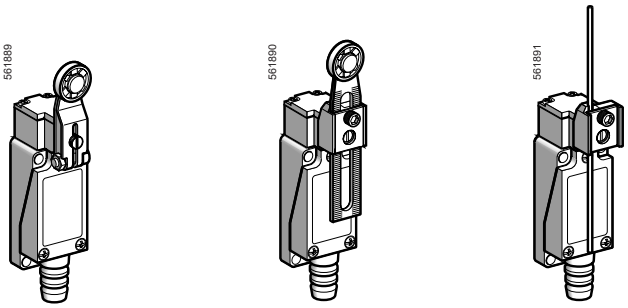

Page 12

With head for multi-directional operators

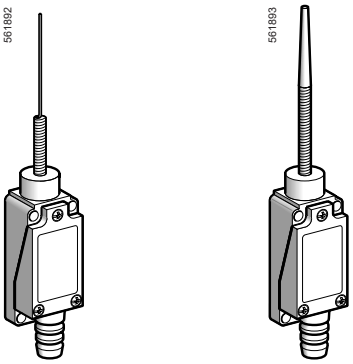

Page 13

Environment

Conforming to standards		IEC 60947-5-1
Certifications		CE, CCC
Ambient air temperature		For operation : - 25…+ 70 °C, for storage: -40…+ 70 °C
Vibration resistance	Conforming to IEC 60068-2-6	10...55 Hz, 3 mm double amplitude
Shock resistance	Conforming to IEC 60068-2-27	30 gn, 11 ms, in the free position
Degree of protection	Conforming to IEC 60529	**IP 65**
Materials		Body and head: metal, cover: plastic
Mechanical durability		**10 x 10^6 operations**
Cable entry		Flexible rubber cable gland suitable for cable Ø 6…9 mm
Tightening torques	Body (M4 screws)	2.4...3.0 N.m / *21.24...26.55 lb-in*
	Cover	0.5...0.6 N.m / *4.42...5.31 lb-in*
	Head (rotary type)	0.3...0.4 N.m / *2.65...3.54 lb-in*
	Roller lever (rotary type)	2.4...3.0 N.m / *21.24...26.55 lb-in*

Contact block characteristics

Rated operational characteristics	**∼ AC (Ue = 240 V, Ie = 3 A, Ith = 10 A); ⎓ DC (Ue = 220 V, Ie = 0.3 A)**
Rated insulation voltage	Ui=300V, pollution degree 3 complies with IEC 60947
Insulation resistance	> 100 mΩ at 500 V
Operating frequency	120 operations per minute
Electrical endurance	8 x 10^5 operations
Contact resistance	≤ 25 mΩ
Cabling	Screw terminals, torque range 0.6...*1.1 N.m / 5.31...8.85 lb-in* Maximum clamping capacity 0.75…1.5 mm^2 per terminal

Limit switches

XC range

For medium duty applications, XCE

Type of operating head

Plunger

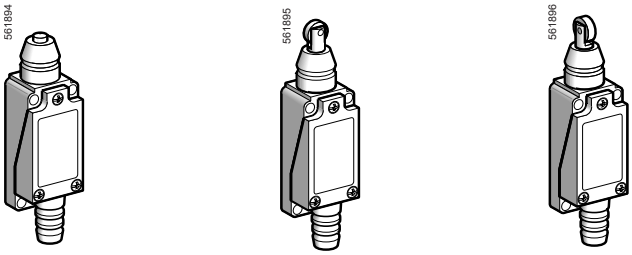

Type of operator	Steel end plunger	Steel roller plunger for lateral cam movement	Steel roller plunger for traverse cam movement
References *(1)*			
1 NO + 1 NC (form Za)	**XCE110C**	**XCE102C**	**XCE103C**
Weigth (kg)	0.110	0.126	0.126

*(1) All products are supplied in individual packaging. They are also available in a bulk pack of 10 products. To order the bulk packed versions, add the suffix **TQ** at the end of product reference. Example **XCE110CTQ**.*
Obviously the indivisible order quantity for this version is 10.

Complementary characteristics not shown under general characteristics (page 10)

Switch actuation	On end
Operating force (maxi.)	9 N
Release force (mini.)	1.5 N
Operating frequency	120 operations per minute
Maximum actuation speed	0.5 m/s
Minimum actuation speed	5 mm/s
Mechanical durability	**10 x 10⁶ operations** (For XCE102C and XCE103C, actuation by 30° cam: 1 million operations)
Cabling	Flexible rubber cable gland suitable for cable Ø 6…9 mm

Operating diagrams

Type of actuation

Operating diagrams
Contact operation
contact closed
contact open

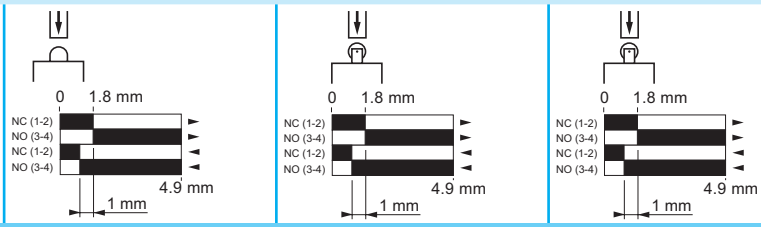

Dimensions in mm

XCE110C

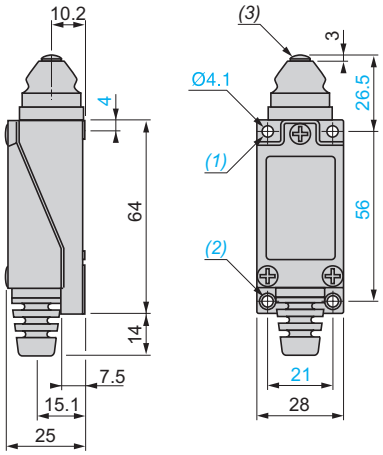

(1) 2 holes M5 tapped 7 in depth.
(2) 2 M5 tapped holes.
(3) Stainless steel plunger Ø 7.

XCE102C

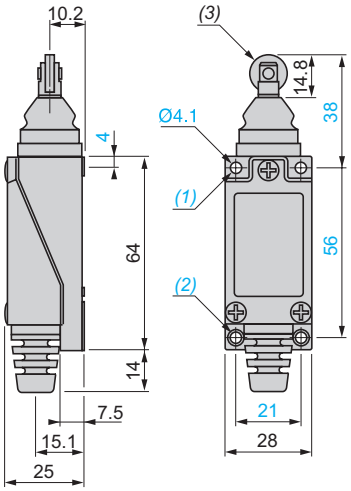

(1) 2 holes M5 tapped 7 in depth.
(2) 2 M5 tapped holes.
(3) Stainless steel roller Ø 12.5 x 3.8.

XCE103C

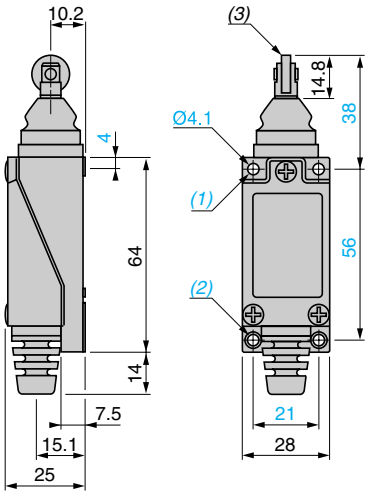

(1) 2 holes M5 tapped 7 in depth.
(2) 2 M5 tapped holes.
(3) Stainless steel roller Ø 12.5 x 3.8.

Limit switches

XC range

For medium duty applications, XCE

Type of operating head

Rotary

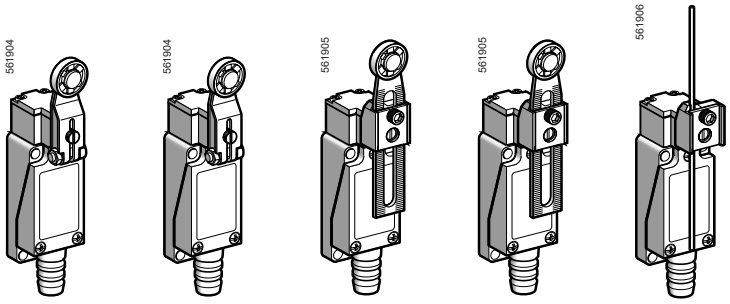

Type of operator	Thermoplastic roller lever	Steel roller lever	Variable length thermoplastic roller lever	Variable length steel roller lever	Round rod Ø 3 mm steel rod
References *(1)*					
1 NO + 1 NC (form Za) 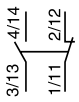	**XCE118C**	**XCE119C**	**XCE145C**	**XCE146C**	**XCE154C**
Weigth (kg)	0.152	0.159	0.175	0.181	0.164
Complementary characteristics not shown under general characteristics (page 10)					
Switch actuation	By 30° cam				By any moving part
Operating force (maxi.)	7.5 N				
Release force (mini.)	0.5 N				
Operating frequency	120 operations per minute				
Maximum actuation speed	1 m/s				
Minimum actuation speed	9 mm/s for rotary type 5 mm/s for multi-directional type				
Mechanical durability	**10 x 10^6 operations**				
Cabling	Flexible rubber cable gland suitable for cable Ø 6…9 mm Maximum clamping capacity 0.75…1.5 mm^2 per terminal				

Operating diagrams

Type of actuation

Operating diagrams
Contact operation
contact closed
contact open

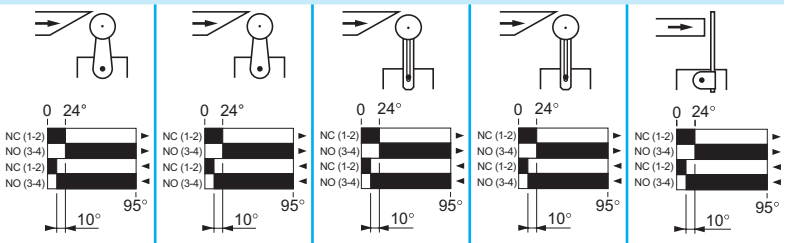

*(1) All products are supplied in individual packaging. They are also available in a bulk pack of 10 products. To order the bulk packed versions, add the suffix **TQ** at the end of product reference. Example **XCE118CTQ**.*
Obviously the indivisible order quantity for this version is 10.

Limit switches

XC range
For medium duty applications, XCE

Type of operating head		
Multi-directional		
	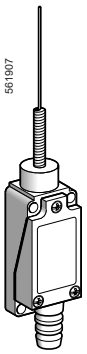	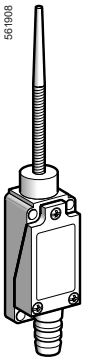
Type of operator	**"Cat's whisker"**	**Spring rod lever with thermoplastic end**
References *(1)*		
1 NO + 1 NC (form Za) 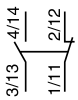	**XCE106C**	**XCE181C**
Weigth (kg)	0.109	0.108
Complementary characteristics not shown under general characteristics (page 10)		
Switch actuation	By any moving part	
Operating force (maxi.)	1.5 N	
Release force (mini.)	0.04 N	
Operating frequency	120 operations per minute	
Maximum actuation speed	1 m/s	
Mechanical durability	**4 x 10^6 operations**	
Cabling	Flexible rubber cable gland suitable for cable Ø 6…9 mm Maximum clamping capacity 1.5 mm^2 per terminal	
Operating diagrams		
Type of actuation		
Operating diagrams Contact operation contact closed contact open	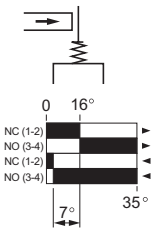	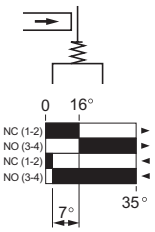

*(1) All products are supplied in individual packaging. They are also available in a bulk pack of 10 products. To order the bulk packed versions, add the suffix **TQ** at the end of product reference. Example **XCE181CTQ**.*
Obviously the indivisible order quantity for this version is 10.

Limit switches

XC range

For medium duty applications, XCE

Dimensions in mm

XCE118C, XCE119C

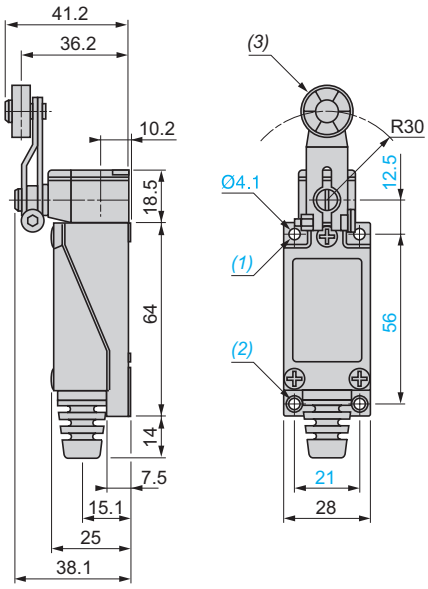

(1) 2 holes M5 tapped 7 in depth.
(2) 2 M5 tapped holes.
(3) Nylon and metal roller Ø 18 x 7 (roller can be rotated and locked in any position through 360°).

XCE145C, XCE146C

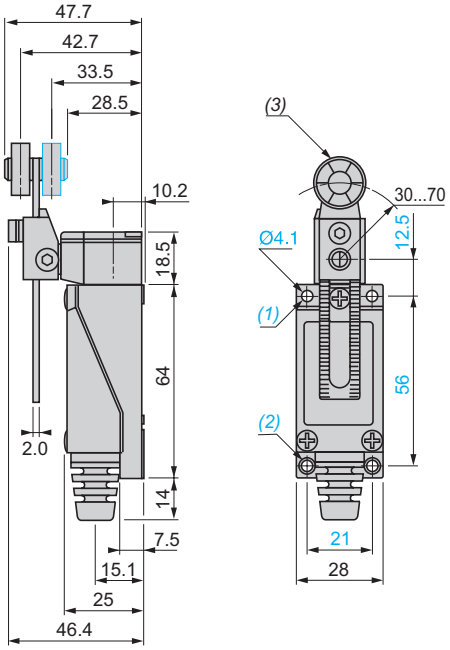

(1) 2 holes M5 tapped 7 in depth.
(2) 2 M5 tapped holes.
(3) Nylon and metal roller Ø 18 x 7.

XCE154C

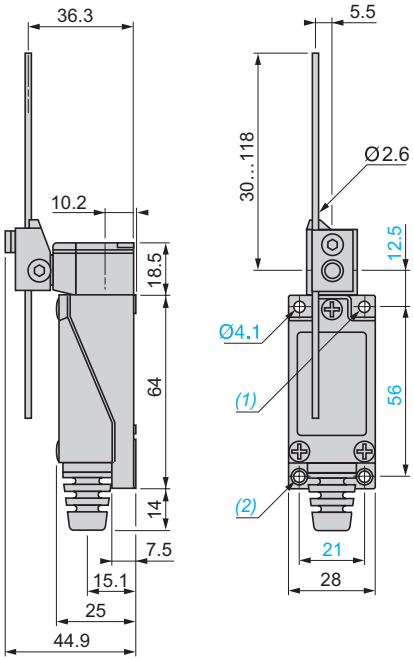

(1) 2 holes M5 tapped 7 in depth.
(2) 2 M5 tapped holes.

Dimensions in mm

XCE106C

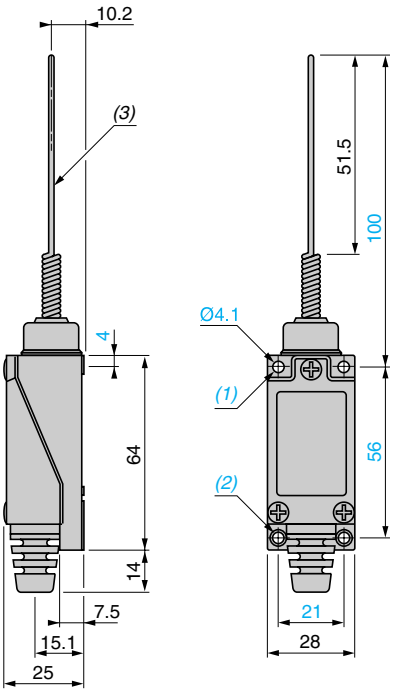

(1) 2 holes M5 tapped 7 in depth.
(2) 2 M5 tapped holes.
(3) Stainless steel wire Ø 1.2.

XCE181C

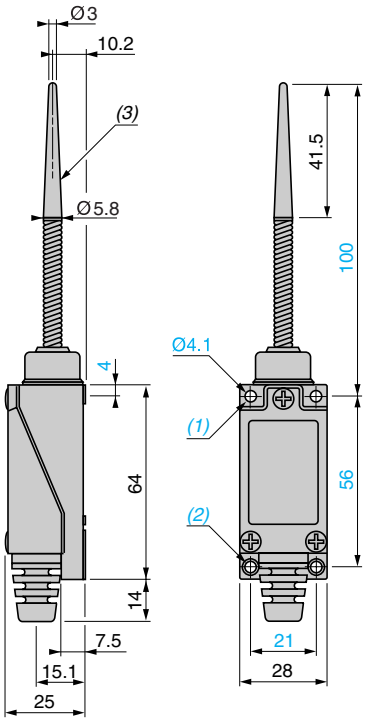

(1) 2 holes M5 tapped 7 in depth.
(2) 2 M5 tapped holes.
(3) Nylon rod.

Limit switches

XC range

For light to medium duty applications, XCJ

XCJ (single-pole contact 1 C/O form C)

With head for linear movement (plunger) operators, fixing by head or body

561835

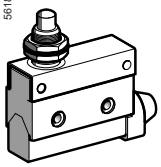

561836

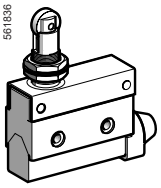

561837

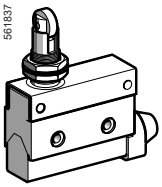

Page 17

With head for linear movement (lever plunger) operators, fixing by body

561838

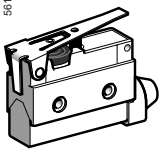

561839

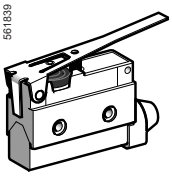

561840

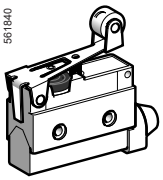

561841

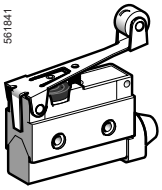

561842

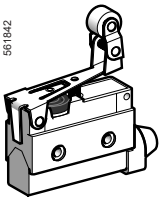

Page 18

Environnement

Conforming to standards		IEC 60947-5-1
Certifications		CE, CCC
Ambient air temperature		For operation: - 25…+ 70 °C, for storage: - 40…+ 70 °C
Vibration resistance	Conforming to IEC 60068-2-6	10…55 Hz XCJ110, XCJ102 and XCJ103C: 3.0 mm double amplitude XCJ125, XCJ126 and XCJ127C: 1.5 mm double amplitude XCJ121 and XCJ128C: 0.7 mm double amplitude
Shock resistance	Conforming to IEC 60068-2-27	10 gn, 11 ms, in the free position
Degree of protection	Conforming to IEC 60529	**IP 40** **IK 04**
Materials		Body: plastic, head: metal
Mechanical durability		**10 x 10^6 operations**
Cable entry		Flexible rubber cable gland suitable for cable Ø 8.5...10.5 mm
Head mounting		Torque range for XCE110C, XCJ102C and XCJ103C: 2.9...4.9 N.m / *25.66...43.66 lb-in*
Body mounting		Mounting torque range (M4 screws): 1.2...1.5 N.m / *10.62...13.27 N.m*

Contact block characteristics

Rated operational characteristics	**∿ AC (Ue = 240 V, Ie = 10 A) , Ith = 10 A** **⎓ DC (Ue = 220 V, Ie = 0.3 A)**
Insulation resistance	> 100 mΩ at ⎓ 500 V
Dielectric withstand voltage	∿ 1000 V, 50/60 Hz for 1 minute between non-continuous terminals ∿ 2000 V, 50/60 Hz between current carrying and non-current carrying parts and between each terminal and ground. Double isolation, CE Class II conforming to IEC 60947-5-1
Operating frequency	120 operations per minute
Electrical endurance	> 8 x 10^5 operations (∿ 220 V, 10 A, P.F. = 1)
Contact resistance	⩽ 25 mΩ
Cabling	M3.5 screw terminals (use cable lug with flexible cable) Torque range: 0.8...1.2 N.m / *7.08...10.62 lb-in*

Limit switches

XC range

For light to medium duty applications, XCJ

Type of operating head

	Plunger (fixing by head or body)		
	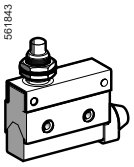	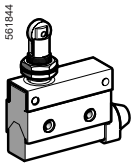	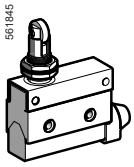
Type of operator	**Steel end plunger**	**Steel roller plunger for lateral cam movement**	**Steel roller plunger for traverse cam movement**
References			
Single pole 1 C/O (form C)	**XCJ110C**	**XCJ102C**	**XCJ103C**
Weight (kg)	0.081	0.086	0.088

Complementary characteristics not shown under general characteristics (page 16)

Switch actuation	On end
Operating force (max.)	4 N
Release force (min.)	0.98 N
Operating frequency	120 operations per minute
Actuation speed	0.01 mm/s…50 cm/s (at pin plunger)
Mechanical durability	**10 x 10^6 operations** (for XCJ102C and XCJ103C, actuation by 30° cam: 4 million operations)
Cabling	M3.5 screw terminals (use cable lug with flexible cable) Torque range: 0.8...1.2 N.m / *7.08...10.62 lb-in*

Operating diagrams

Type of actuation

Operating diagrams
Contact operation
contact closed
contact open

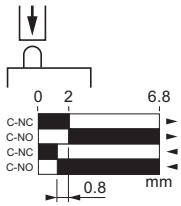

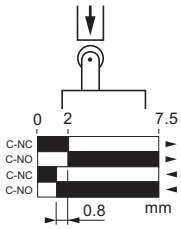

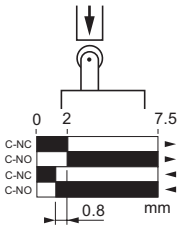

Dimensions in mm

XCJ110C

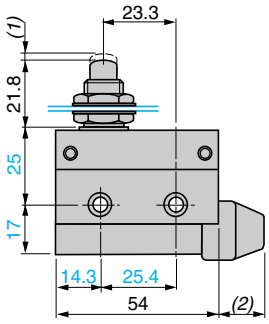

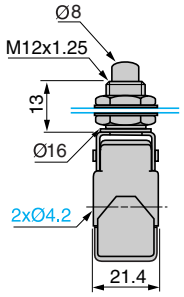

(1) 2 max.
(2) 16.5 max.

XCJ102C

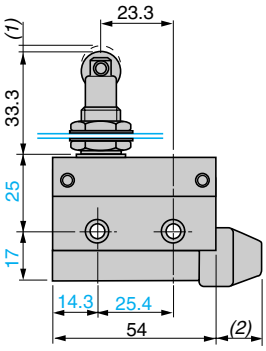

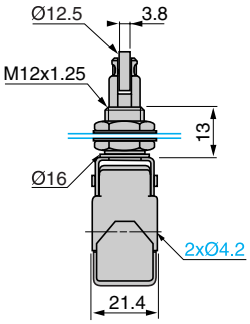

(1) 2 max.
(2)16.5 max.

XCJ103C

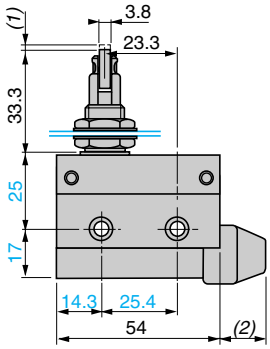

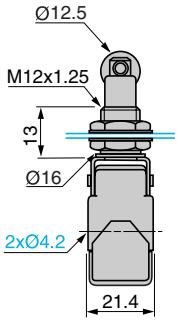

(1) 2 max.
(2) 16.5 max.

Limit switches

XC range

For light to medium duty applications, XCJ

Type of operating head	Plunger (fixing by body)				
	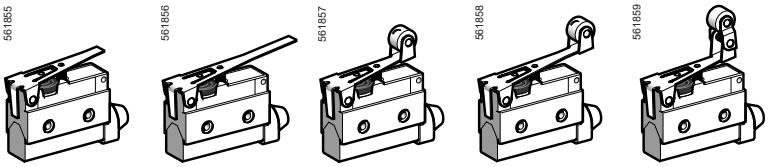				
Type of operator	**Short flat lever plunger**	**Long flat lever plunger**	**Short flat roller lever plunger**	**Long flat roller lever plunger**	**Short flat roller lever plunger, one way operation**
References					
Single pole 1 C/O (form C) NC NO C	**XCJ125C**	**XCJ126C**	**XCJ127C**	**XCJ128C**	**XCJ121C**
Weight (kg)	0.052	0.053	0.057	0.057	0.059
Complementary characteristics not shown under general characteristics (page 16)					
Switch actuation	On end		By 30° cam		
Operating force (maxi.)	1.9 N	1.3 N	2.3 N	1.6 N	2.4 N
Release force (mini.)	0.59 N	0.39 N	0.78 N	0.49 N	0.98 N
Operating frequency	120 operations per minute				
Actuation speed	0.01 mm/s…50 cm/s (at pin plunger)				
Mechanical durability	**10 x 10^6 operations**				
Cabling	M3.5 screw terminals (use cable lug with flexible cable) Torque range: 0.8...1.2 N.m / *7.08...10.62 lb-in*				
Operating diagrams					
Type of actuation					
Operating diagrams Contact operation contact closed contact open	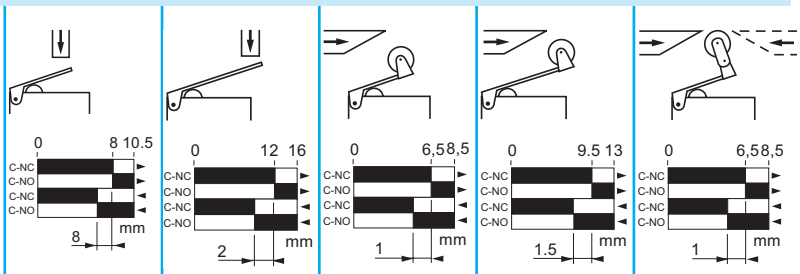				

Limit switches

XC range

For light to medium duty applications, XCJ

Dimensions in mm

XCJ125C

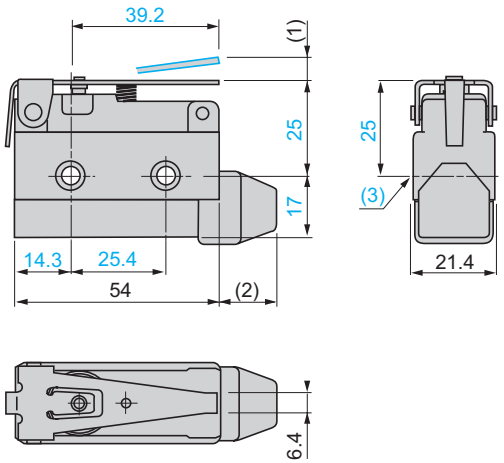

(1) 8.5 max.
(2) 16.5 max.
(3) 2 x Ø 4.2

XCJ126C

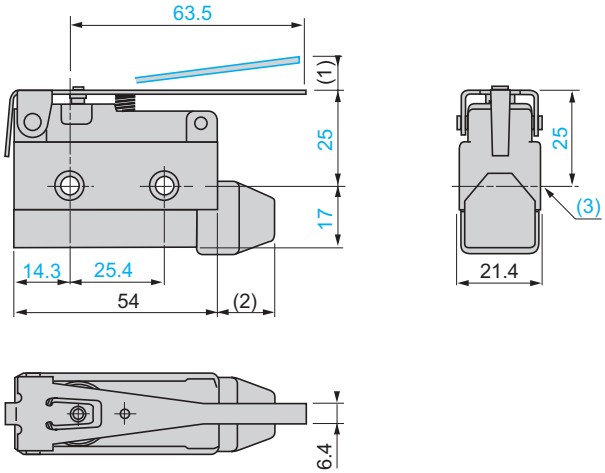

(1) 13.5 max.
(2) 16.5 max.
(3) 2 x Ø 4.2

XCJ127C

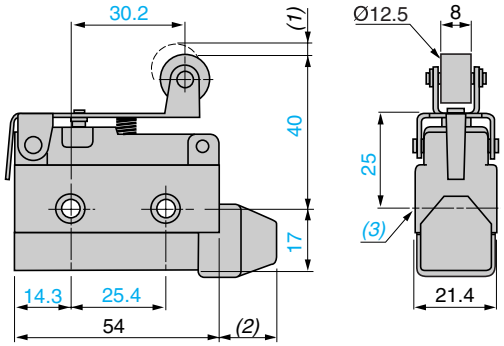

(1) 6.5 max.
(2) 16.5 max.
(3) 2 x Ø 4.2

XCJ128C

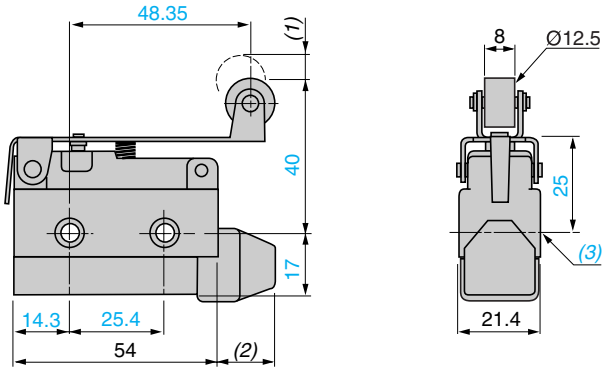

(1) 11 max.
(2) 16.5 max.
(3) 2 x Ø 4.2

XCJ121C

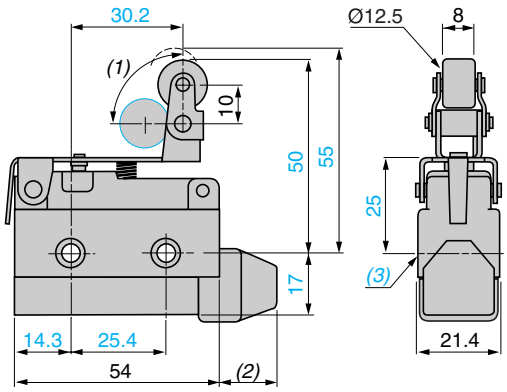

(1) 90° max.
(2) 16.5 max.
(3) 2 x Ø 4.2

Limit switches
XC range
Product reference index

X	
XCE110C	11
XCE102C	11
XCE103C	11
XCE118C	12
XCE119C	12
XCE145C	12
XCE146C	12
XCE154C	12
XCE106C	13
XCE181C	13
XCJ110C	17
XCJ102C	17
XCJ103C	17
XCJ125C	18
XCJ126C	18
XCJ127C	18
XCJ128C	18
XCJ121C	18

www.tesensors.com

The information provided in this catalogue contains description of products sold by TMSS France, its subsidiaries and other affiliated companies ('Offer') with technical specifications and technical characteristics of the performance of the corresponding Offer.

The content of this document is subject to revision at any time without notice due to continued progress in methodology, design and manufacturing.

To the extent permitted by applicable law, no responsibility or liability is assumed by TMSS France, its subsidiaries and other affiliated companies for any type of damage arising out of or in connexion with (a) informational content of this catalogue not conforming with or exceeding the technical specifications, or (b) any error contained in this catalogue, or (c) any use, decision, act or omission made or taken on the basis of or in reliance on any information contained or referred to in this catalogue.

NEITHER TMSS FRANCE, ITS SUBSIDIARIES, NOR ITS OTHER AFFILIATES, AS THE CASE MAYBE, MAKE NO WARRANTY OR REPRESENTATION OF ANY KIND, WHETHER EXPRESS OR IMPLIED, AS TO WHETHER THIS CATALOGUE OR ANY INFORMATION CONTAINED THEREIN SUCH AS PRODUCTS WILL MEET REQUIREMENTS, EXPECTATIONS OR PURPOSE OF ANY PERSON MAKING USE THEREOF.

Telemecanique™ Sensors is a trademark of Schneider Electric Industries SAS used under license by TMSS France. Any other brands or trademarks referred to in this catalogue are property of TMSS France or, as the case may be, of its subsidiaries or other affiliated companies. All other brands are trademarks of their respective owners.

This catalogue and its content are protected under applicable copyright laws and provided for informative use only.

No part of this catalogue may be reproduced or transmitted in any form or by any means (electronic, mechanical, photocopying, recording, or otherwise), for any purpose, without the prior written permission of TMSS France. Copyright, intellectual, and all other proprietary rights in the content of this catalogue (including but not limited to audio, video, text, and photographs) rests with TMSS France, its subsidiaries, and other affiliated companies or its licensors. All rights in such content not expressly granted herein are reserved. No rights of any kind are licensed or assigned or shall otherwise pass to persons accessing this information.

As standards, specifications and design change from time to time, please ask for confirmation of the information given in this publication.

©2024, TMSS France, All Rights Reserved.

TMSS France SAS
Share capital: 366 931 214 €
Tour Eqho, 2 avenue Gambetta
92 400 Courbevoie – France
908 125 255 RCS Nanterre

February 2024 - V1.1

TESEBRO000037EN