Radio frequency identification
XG range

Compact smart antennas, Ø 22 mm mounting

Catalogue

Simply easy!™

Telemecanique
Sensors

Contents

Radio frequency identification XG range

Compact smart antennas, Ø 22 mm mounting

- **General presentation** . . . . . *pages 2 and 3*
- **Characteristics**
  - Compact smart antennas . . . . . *page 4*
  - Electronic tags . . . . . *page 5*
- **References**
  - Compact smart antennas . . . . . *page 6*
  - Electronic tags . . . . . *page 6*
  - Accessories . . . . . *page 7*
- **Dimensions** . . . . . *page 8*
- **Installation precautions** . . . . . *page 8*
- **Connections** . . . . . *page 9*

- **Product reference index** . . . . . *page 10*

Radio frequency identification 13.56 MHz XG range

Compact smart antennas, Ø 22 mm mounting

XG range

RFID is the abbreviated term used to designate radio frequency identification systems. These frequencies range between 50 kHz and 2.5 GHz. The most widely used is 13.56 MHz.

The XG range RFID system is used to identify operators on machines by means of contactless RFID cards or key fobs.

Operator ID information is stored in a memory that can be accessed using a simple radio frequency link. This memory is in the form of an electronic tag, which contains an antenna and an integrated circuit.

When a tag enters the field generated by the reader/smart antenna, it detects the signal and exchanges data (read or write) between its memory and the reader/smart antenna.

Telemecanique Sensors offers 3 smart antennas for mounting on a control panel. These XG smart antennas are designed for identifying operators on systems such as:

- mobile access platforms for trucks and elevators
- electric vehicle charging stations
- machine control panels
- automated tools, presses, and assembly lines, etc.

Mounted in a standard Ø 22 mm hole

Rapid and efficient access control

> XG smart antennas identify operators by means of their RFID card or electronic key fob in order to determine which operations they are authorized to access.
> One model has 2 integrated LEDs on the front. These multi-color LEDs are used to guide the operator by means of visual indications controlled by the automation system via the smart antenna's Modbus serial link. There is a choice of 7 different colors that can also be combined with flashing.

Easy to install

> Less machining: The smart antenna is mounted on a panel through a standard Ø 22 mm hole and manually tightened to secure in place using a single locking nut.
> Less wiring: A single M12 connector is required for the smart antenna power supply (and network connection for XGCS49LB201 and XGCS490B201 smart antennas).
> Dedicated accessories, such as network T-connectors and M12 cables, are available to facilitate daisy-chain connections *(1)*.

Easy to configure

> The network address can be set simply by presenting the RFID card supplied with the smart antenna.
> Integrated network and RFID functions
> No programming
> Automatic detection of RFID electronic tags (read or write)
> Automatic setting of communication parameters (speed, format, parity, protocol, etc.)
> Read/write compatibility with the majority of 13.56 MHz tags on the market
> Low sensitivity to metal environments
> User cards for the XGCS491B201 standalone smart antenna can be enrolled without the need for any special software using configuration kit XGSZCNFAC.

(1) Up to 15 XG compact smart antennas can be connected to the same network. All connections are made via M12 connectors, using a complete range of cables and T-connectors. Please consult our website www.tesensors.com.

+ Easily integrate operator ID functionality into your machines

Radio frequency identification 13.56 MHz XG range

Compact smart antennas, Ø 22 mm mounting

Rugged and compact

A monobloc device designed for harsh environments

> XG smart antennas, with their sleek, clean design with no screws on the front face, are intended for use in industrial environments, particularly in cleaning applications in the medical and food and beverage sectors.
> The extended operating temperature range means that XG smart antennas can operate in some of the harshest conditions.
> XG smart antennas are highly compact, measuring just 40 x 40 x 40 mm, and have a simple mounting system via a nut on the rear, meaning they can be easily integrated into even the smallest of spaces.
> XG compact smart antennas offer a tried-and-tested solution that has been validated through numerous laboratory and field tests.

Worldwide compatibility

With 13.56 MHz standards

> The XG identification system is open to the majority of ISO 18000-3, ISO 15693, and ISO 14443 electronic tags.
> With their low power consumption (< 60 mA) and a choice of suitable materials, XG smart antennas are environmentally-friendly.

Use

> The **XGCS49LB201** compact smart antenna features integrated multi-color LEDs that can be controlled remotely by the automation system via the Modbus RTU communication network.
> These LEDs provide intuitive information to the operator when they present their RFID card to the reader and their profile is read by the automation system (for example, steady green light if they are authorized to use the control station, or flashing red if their profile is not accepted, etc.).
The 2 integrated LEDs are controlled in parallel via Modbus word write requests. They are visible from all angles regardless of the operator's viewing angle.

> The **XGCS490B201** compact smart antenna can be easily combined with any industrial terminal that supports Modbus RTU. No specific driver or dedicated function is required, since all exchanges are managed by standard word read or write requests.
> Example of use: A user or operator profile is contained in the RFID card. When the card is read, the terminal automatically selects the accessible pages. It is capable of differentiating between an inexperienced operator who is not authorized to access machine settings and a maintenance engineer who has access to these settings.

> The **XGCS491B201** standalone compact smart antenna can be used to identify one or more operators on a simple machine or enclosure without an automated system, both inside and outside a building. This smart antenna directly controls a relay or a contactor.
> The tamper-resistant RFID cards are configured manually with no need for a computer or software.
The number of user cards is unlimited. The smart antenna is compatible with a wide range of RFID cards on the market.
> Example of use: Helping to make the Start/Stop function secure on a loading bay (opening the door, raising/lowering the access platform, etc.) to avoid having to leave keys on the unit.

Description

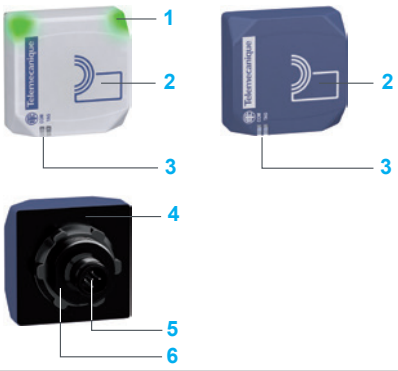

1 LEDs for informing the operator (7 different colors can be selected and combined with flashing)
2 Network address configuration
3 RFID and communication diagnostic LEDs
4 Seal
5 M12 connector for power supply (and connection to the Modbus RTU network for XGCS49LB201 and XGCS490B201 smart antennas)
6 Locking nut for mounting in Ø 22 mm hole

Radio frequency identification 13.56 MHz XG range

Compact smart antennas, Ø 22 mm mounting

Characteristics of XG compact smart antennas

Smart antenna type			XGCS49LB201	XGCS490B201	XGCS491B201
Certification			CE, cULus, IC, FCC part 15		
Conforming to standards			EN 301489-1, EN 301489-3, EN 300330-1, and EN 300330-2		
Ambient air temperature	For operation	**°C**	-25…+70	-25…+70	-40…+70
	For storage	**°C**	-40…+85	-40…+85	-40…+85
Degree of protection	Conforming to IEC 60529		IP 69K (front) IP 65 (rear)	IP 65	IP 65
Vibration resistance	Conforming to EN 60068.2.6		2 mm from 5 to 29.5 Hz/7 gn from 29.5 to 150 Hz		
Shock resistance	Conforming to EN 60068.2.27		30 gn/11 ms		
	Conforming to EN 50102		IK 04		
Resistance to interference	Conforming to IEC 61000		Resistance to electrostatic discharge, radiated electromagnetic fields, fast transients, electrical surges, conducted and induced interference, and network frequency magnetic fields		
Dimensions (W x H x D)		**mm**	40 x 40 x 40		
RFID frequency		**MHz**	13.56		
Nominal sensing distance		**mm**	20 to 70 depending on associated tags		
Type of associated tag			ISO 15693 and ISO 14443 standardized tags Automatic detection of tag type		
Examples of RFID compatible chips			Fujitsu (MB89R118), NXP (I-Code SL2, SL1, Ultralight, Std 1K/4K), Texas (Tag-it HFI), µEM4135		
Nominal supply voltage		**V**	24 ⎓ PELV (protective extra-low voltage)		
Supply voltage limits (including ripple)		**V**	19.2...29 ⎓		
Power consumption		**mA**	< 60		
Interface	Physical interface		RS 485		PNP discrete output 300 mA protected against short-circuits and overloads
	Protocol		Modbus RTU		–
	Data rate		9,600…115, 000 baud (automatic detection)		–
	Medium (see cable references on page 7)		2-pair shielded twisted pair cable with M12 connector, A-coded		3-wire unshielded cable with M12 connector, A-coded
Display	To inform the operator		2 multi-color LEDs (choice of 7 colors) controlled by Modbus requests	–	–
	For communication		1 bi-color LED (Tag presence/Dialog between smart antenna and tag)		
			1 bi-color LED (Modbus network activity)		1 bi-color LED (output/status)
Connections			1 male M12 5-pin connector (see connections on page 9)		
Tightening torque	Locking nut		2.2 Nm ± 0.2/*19.5 lb-in ± 1.8*		

Radio frequency identification 13.56 MHz XG range

Compact smart antennas, Ø 22 mm mounting

Characteristics of electronic tags

Tag type			Electronic key fob XGHBPB3345	ISO RFID card XGHB90E340	ISO RFID card XGHB90E341
Ambient air temperature	For operation	**°C**	-5…+80	-25…+50	-25…+50
	For storage	**°C**	-25…+80	-40…+55	-40…+55
Degree of protection			IP 67	IP 65	IP 65
Standard supported			ISO 15693	ISO 15693	ISO 14443
Vibration resistance	Conforming to EN 60068.2.6		2 mm from 5 to 29.5 Hz 7 gn from 29.5 to 150 Hz	2 mm from 5 to 29.5 Hz 7 gn from 29.5 to 150 Hz	2 mm from 5 to 29.5 Hz 7 gn from 29.5 to 150 Hz
Shock resistance	Conforming to EN 60068.2.27		30 gn/11 ms	30 gn/11 ms	30 gn/11 ms
	Conforming to EN 50102		IK02	IK02	IK02
Dimensions		**mm**	40 x 31 x 4.8	54 x 85.5 x 1	54 x 85.5 x 1
Housing material			PC	PVC	PVC
Memory capacity		**Bytes**	112	256	736
Type of memory			EEPROM	EEPROM	EEPROM
Type of operation			Read/Write	Read/Write	Read/Write
Nominal sensing distance (Read/Write)	With compact smart antennas, Ø 22 mm mounting	**mm**	30	70	30
Number of read cycles			Unlimited	Unlimited	Unlimited
Number of write cycles	Minimum number (per data bit, throughout the temperature range)		100,000	100,000	100,000

Radio frequency identification 13.56 MHz XG range

Compact smart antennas, Ø 22 mm mounting

16003

XGCS491B201

16001

XGCS49LB201

16003

XGCS490B201

16005

XGHBPB3345

105914

XGHB90E340
XGHB90E341

105921

XGSZCNF01

107359

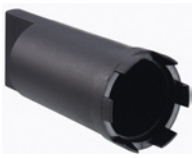

ZB5AZ905

Compact smart antennas, 13.56 MHz

Description	Interface	Dimensions mm	Reference	Weight kg
Standalone compact smart antenna for panel mounting *(1)* M12 male connector	PNP output	40 x 40 x 40	**XGCS491B201**	0.257
Compact smart antenna for panel-mounting *(2)* M12 male connector	Modbus RTU	40 x 40 x 40	**XGCS490B201**	0.257
Compact smart antenna for panel-mounting with LEDs *(2)* M12 male connector	Modbus RTU	40 x 40 x 40	**XGCS49LB201**	0.257

Electronic tags

Tag type	Nominal sensing distance mm	For use with	Order in multiples of	Unit reference	Weight kg
Tag with EEPROM type memory					
Electronic key fob 112 bytes 40 x 31 x 4.8 mm	10	XGCS49LB201 XGCS490B201 XGCS491B201	10	**XGHBPB3345**	0.005
ISO 15693 RFID card *(3)* 256 bytes 54 x 85.5 x 1 mm	70	XGCS49LB201 XGCS490B201	10	**XGHB90E340**	0.005
ISO 14443 RFID card *(3)* 736 bytes 54 x 85.5 x 1 mm	30	XGCS49LB201 XGCS490B201 XGCS491B201	25	**XGHB90E341**	0.005

Configuration and mounting accessories

Description	For use with	Unit reference	Weight kg
RFID card For smart antenna address configuration (supplied with the smart antenna)	XGCS49LB201 XGCS490B201	**XGSZCNF01**	0.005
Configuration kit for standalone compact smart antenna, comprising: ■ 2 identical “Master” RFID cards ■ 1 Reset RFID card ■ 1 instruction sheet	XGCS491B201	**XGSZCNFAC**	0.025
Locking nut tightening tool *(4)*	XGCS49LB201 XGCS490B201 XGCS491B201	**ZB5AZ905**	0.016

(1) Supplied with a locking nut and the User Guide.
*(2) Supplied with configuration RFID card **XGSZCNF01**, a locking nut, and the User Guide.*
(3) Customized versions available on request.
(4) Schneider Electric product.

Radio frequency identification 13.56 MHz XG range

Compact smart antennas, Ø 22 mm mounting

Connection accessories

For standalone compact smart antenna XGCS491B201

Description	Length m	Reference	Weight kg
Pre-wired connector Straight female M12 connector/bare wires	2	**XZCPV11V2L2**	0.073
	5	**XZCPV11V2L5**	0.158
	10	**XZCPV11V2L10**	0.306
Pre-wired connector Elbow female M12 connector/bare wires	2	**XZCPV12V2L2**	0.074
	5	**XZCPV12V2L5**	0.160
	10	**XZCPV12V2L10**	0.302

For compact smart antennas XGCS49LB201 and XGCS490B201

Description	Used for	Length m	Reference	Weight kg
Black IP 67 Modbus shielded cable with male/female M12 connectors A-coded *(1)*	RS 485 connection and supplying power between 2 smart antennas or between a compact smart antenna and a tap-off box *(2)*	1	**TCSMCN1M1F1**	0.080
		2	**TCSMCN1M1F2**	0.115
		5	**TCSMCN1M1F5**	0.270
		10	**TCSMCN1M1F10**	0.520
Modbus IP 67 shielded pre-wired connector with female M12 connector/ bare wires, A-coded *(1)*	Connecting a smart antenna to a Modbus network and a power supply	2	**TCSMCN1F2**	0.115
		5	**TCSMCN1F5**	0.270
		10	**TCSMCN1F10**	0.520
M12 network T-connector 1M/2F A-coded, 5-pin For RS 485 network	Daisy-chain connection between 2 smart antennas using TCSMCN1M1F● cables	–	**TCSCTN011M11F**	0.035
Straight male M12 connector 5-pin, A-coded	–	–	**XZCC12MDB50R**	0.050

(1) Supplied with holder for identification legend included with product.
(2) Please refer to the "Radio frequency identification. XG range" catalogue.

XG_1471_6004

TCSMCN1M1F●

XG_1471_6003

TCSMCN1F●

106927

TCSCTN011M11F

PF152522

XZCC12MDB50R

Radio frequency identification 13.56 MHz XG range

Compact smart antennas, Ø 22 mm mounting

Dimensions

Electronic key fob XGHBPB3345

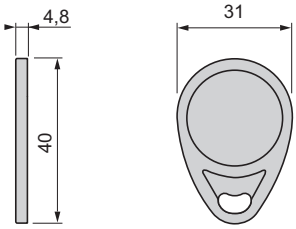

ISO RFID cards XGHB90E340 and XGHB90E341

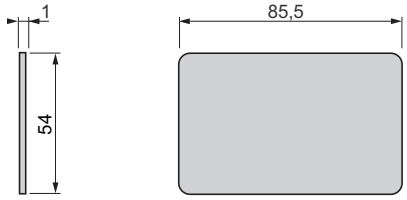

Compact smart antennas XGCS49LB201, XGCS490B201, and XGCS491B201

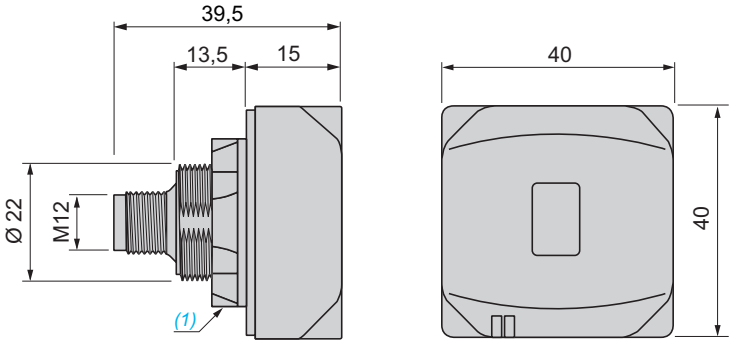

(1) Locking nut

Installation precautions

Minimum mounting distances between system components

Minimum distance between 2 identical smart antennas according to their positioning and the type of tag used (mm)

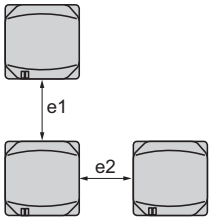

Tag	XGCS49●B201 smart antennas	
	e1	e2
XGHBPB3345	90	90
XGHB90E340	310	310
XGHB90E341	90	90

Mounting on metal support

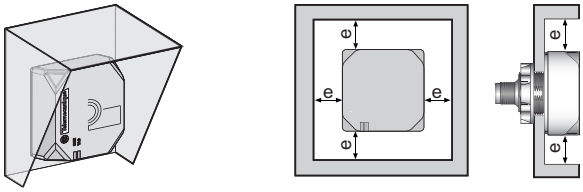

e > 20 mm

Radio frequency identification 13.56 MHz XG range

Compact smart antennas, Ø 22 mm mounting

Connections

Standalone compact smart antenna XGCS491B201

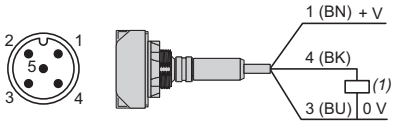

Pin no.	Description
1	+ 24 V ⎓
2	Not connected
3	0 V
4	PNP output
5	Not connected

Modbus connections

Compact smart antennas XGCS49LB201 and XGCS490B201

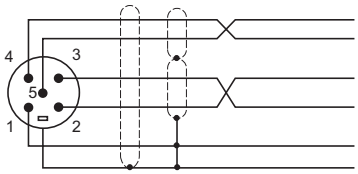

Pin no.	Modbus smart antenna signal
1	Drain (Modbus-SHLD)
2	+ 24 V ⎓
3	0 V/Modbus-GND
4	D0
5	D1

Connection examples

Connection to a Schneider Electric Magelis terminal

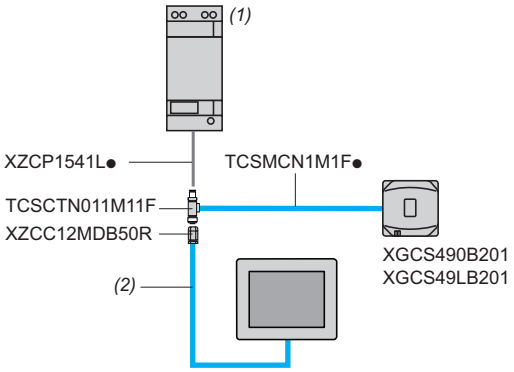

Daisy-chain connection to a Schneider Electric automation platform

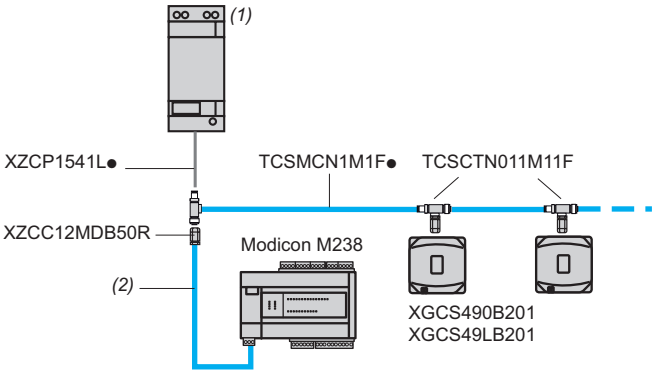

Connection to a contactor to replace the Start button function on a simple machine

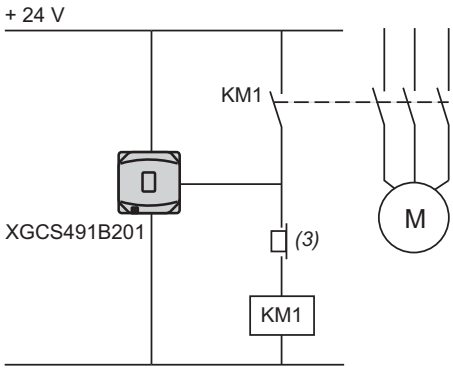

(1) Schneider Electric ***ABL8●●*** *power supply*
(2) Schneider Electric ***VW3A8306R03*** *cable*
(3) Stop button

Product reference index

T

TCSCTN011M11F	7
TCSMCN1F2	7
TCSMCN1F5	7
TCSMCN1F10	7
TCSMCN1M1F1	7
TCSMCN1M1F2	7
TCSMCN1M1F5	7
TCSMCN1M1F10	7

X

XGCS49LB201	6
XGCS490B201	6
XGCS491B201	6
XGHB90E340	6
XGHB90E341	6
XGHBPB3345	6
XGSZCNF01	6
XGSZCNFAC	6
XZCC12MDB50R	7
XZCPV11V2L2	7
XZCPV11V2L5	7
XZCPV11V2L10	7
XZCPV12V2L2	7
XZCPV12V2L5	7
XZCPV12V2L10	7

Z

ZB5AZ905	6

www.tesensors.com

The information provided in this catalogue contains description of products sold by TMSS France, its subsidiaries and other affiliated companies ('Offer') with technical specifications and technical characteristics of the performance of the corresponding Offer.

The content of this document is subject to revision at any time without notice due to continued progress in methodology, design and manufacturing.

To the extent permitted by applicable law, no responsibility or liability is assumed by TMSS France, its subsidiaries and other affiliated companies for any type of damage arising out of or in connexion with (a) informational content of this catalogue not conforming with or exceeding the technical specifications, or (b) any error contained in this catalogue, or (c) any use, decision, act or omission made or taken on the basis of or in reliance on any information contained or referred to in this catalogue.

NEITHER TMSS FRANCE, ITS SUBSIDIARIES, NOR ITS OTHER AFFILIATES, AS THE CASE MAYBE, MAKE NO WARRANTY OR REPRESENTATION OF ANY KIND, WHETHER EXPRESS OR IMPLIED, AS TO WHETHER THIS CATALOGUE OR ANY INFORMATION CONTAINED THEREIN SUCH AS PRODUCTS WILL MEET REQUIREMENTS, EXPECTATIONS OR PURPOSE OF ANY PERSON MAKING USE THEREOF.

Telemecanique™ Sensors is a trademark of Schneider Electric Industries SAS used under license by TMSS France. Any other brands or trademarks referred to in this catalogue are property of TMSS France or, as the case may be, of its subsidiaries or other affiliated companies. All other brands are trademarks of their respective owners.

This catalogue and its content are protected under applicable copyright laws and provided for informative use only.

No part of this catalogue may be reproduced or transmitted in any form or by any means (electronic, mechanical, photocopying, recording, or otherwise), for any purpose, without the prior written permission of TMSS France. Copyright, intellectual, and all other proprietary rights in the content of this catalogue (including but not limited to audio, video, text, and photographs) rests with TMSS France, its subsidiaries, and other affiliated companies or its licensors. All rights in such content not expressly granted herein are reserved. No rights of any kind are licensed or assigned or shall otherwise pass to persons accessing this information.

As standards, specifications and design change from time to time, please ask for confirmation of the information given in this publication.

©2024, TMSS France, All Rights Reserved.

TMSS France SAS

Share capital: 366 931 214 €
Tour Eqho, 2 avenue Gambetta
92 400 Courbevoie – France
908 125 255 RCS Nanterre

February 2024 - V1.1

TESEBRO000049EN