Safety detection solutions
XCS range
Safety switches

Catalogue

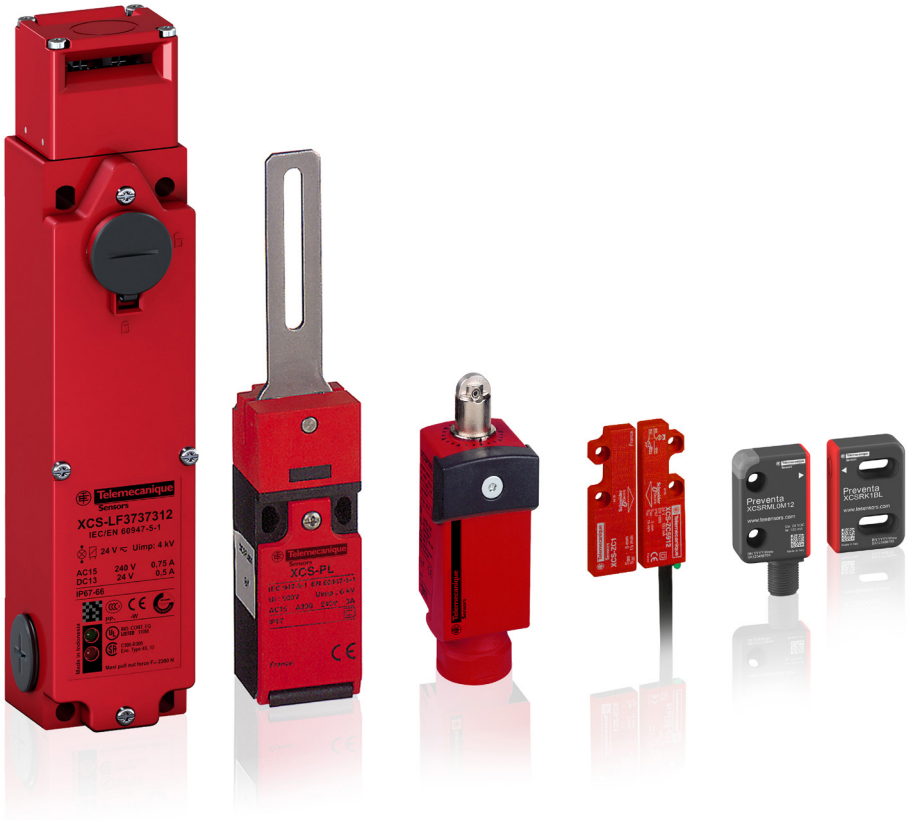

YAGEO GROUP Brings you | Telemecanique Sensors

Contents

Safety detection solutions
XCS safety switches

XCS safety switches

- **Overview** ..... *page 2*

Selection guide ..... *page 6*

- **XCS range: general presentation** ..... *page 16*
- **Miniature safety limit switches**
  - XCSM range: presentation ..... *page 26*
  - XCSM range: characteristics, references ..... *page 28*
- **Compact safety limit switches**
  - XCSD and XCSP ranges: presentation ..... *page 30*
  - XCSD range, metal: characteristics, references ..... *page 32*
  - XCSP range, plastic: characteristics, references ..... *page 34*
- **Lever or spindle-operated safety switches**
  - XCSPL, XCSPR and XCSTR ranges: presentation ..... *page 36*
  - XCSPL, XCSPR and XCSTR ranges: characteristics, references ..... *page 38*
- **Key-operated safety switches**
  - XCSA, XCSB, XCSC, XCSMP, XCSPA, XCSTA ranges ..... *page 40*
  - XCSMP range: characteristics, references ..... *page 42*
  - XCSPA and XCSTA ranges: characteristics, references ..... *page 46*
  - XCSA, XCSB and XCSC ranges: characteristics, references ..... *page 50*
- **Safety interlock switches**
  - XCSLE and XCSLF ranges, slim ..... *page 54*
  - XCSE and XCSTE ranges, rectangular ..... *page 70*
- **RFID safety switches**
  - Contactless RFID safety switches XCSR ..... *page 86*
  - Miniature RFID safety switches XCSRM ..... *page 98*
- **Coded magnetic safety switches**
  - XCSDMC, XCSDMP, XCSDMR ranges: presentation ..... *page 106*
  - XCSDMC, XCSDMP, XCSDMR ranges: characteristics, references ..... *page 108*

Selection guide: XPS safety control units ..... *page 116*

- **XPSU universal safety relays** ..... *page 116*
- **Product reference index** ..... *page 118*

> Appropriate solutions

The latest operating safety standards propose new risk management methods right from the design stage, making use of concepts such as Safety Integrity Levels (SIL) and Performance Levels (PL).

Telemecanique Sensors safety solutions enable you to optimize the cost of your installations according to the level of safety required, while maximizing interoperability.

3 pre-defined safety levels

PL=b (category 1) **/ SIL 1**

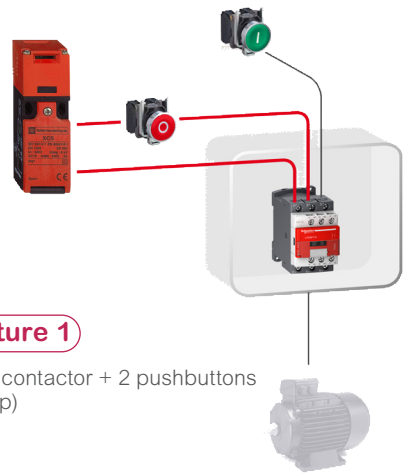

Architecture 1

1 XCSPA + 1 contactor + 2 pushbuttons (start and stop)

PL=d (category 3) **/ SIL 2**



Architecture 2

Several XCSLF in series + XPSUAF●TE + 2 contactors + 1 pushbutton start + XPSVNE (for zero speed detection)
For more than one XCSLF connected in series, the safety level can even be reduced to PLc (see fault masking restrictions in ISO/TR 24119)

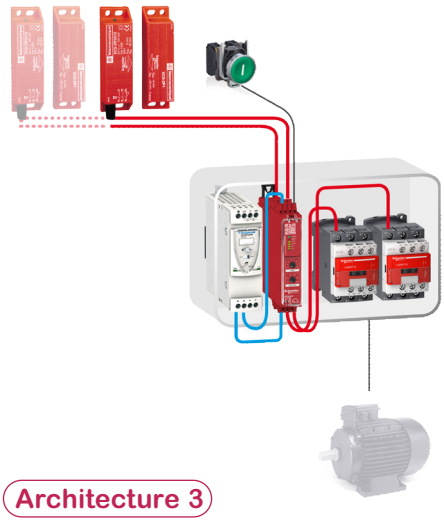

Architecture 3

Several XCSDM in series with 1 XPSUAF●TE + power supply + contactor
For more than one XCSDM connected in series, the safety level can even be reduced to PLc (see fault masking restrictions in ISO/TR 24119)

Used with Telemecanique Sensors safety relays, safety controllers or safety PLCs, and motor starter solutions, XCS safety switches offer levels of access protection up to PLe, category 4, SIL3, according to standards requirements in force EN ISO 13849-1 and EN/IEC 62061.

PL=e (category 4) / **SIL 3**

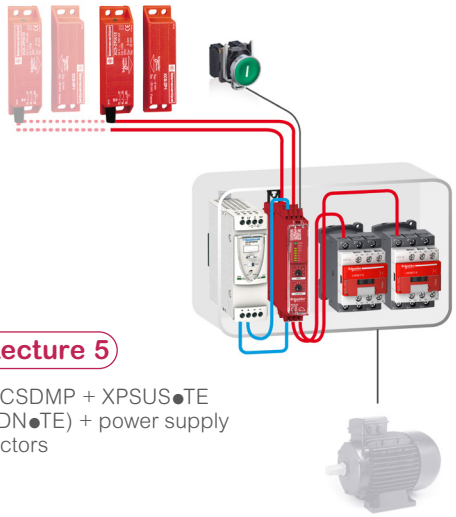

Architecture 5

Several XCSDMP + XPSUS●TE
(or XPSUDN●TE) + power supply
+ 2 contactors

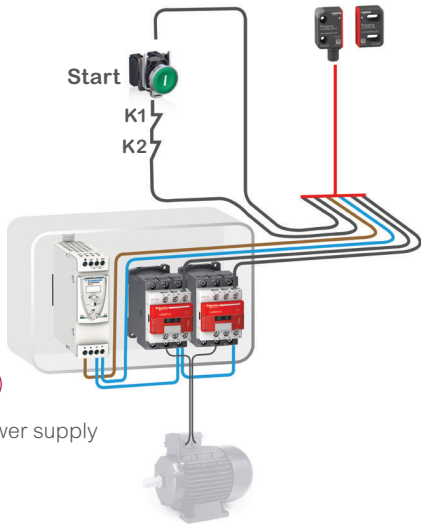

Architecture 6

XCSRM●3M12 + power supply
+ 2 contactors

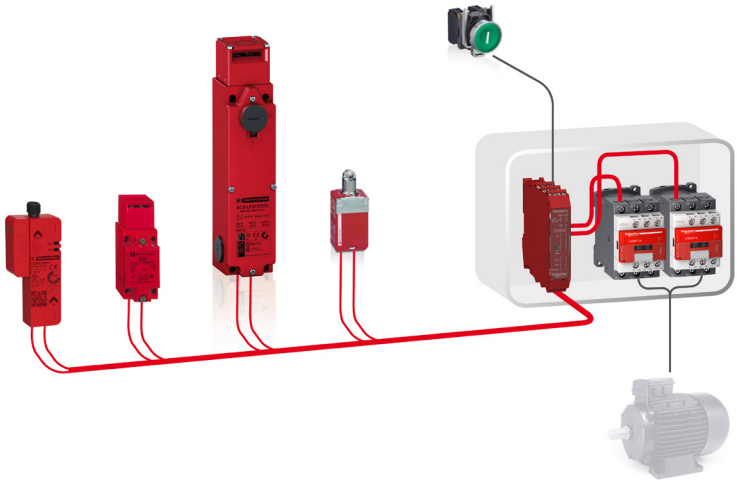

Architecture 4

1 XCSRC●0M12 + 1 XCSA + 1 XCSLF
+ 1 XCSM + XPSMCM + 2 contactors

Architecture 7

Several XCSRC●2M12 + power supply + 2 contactors

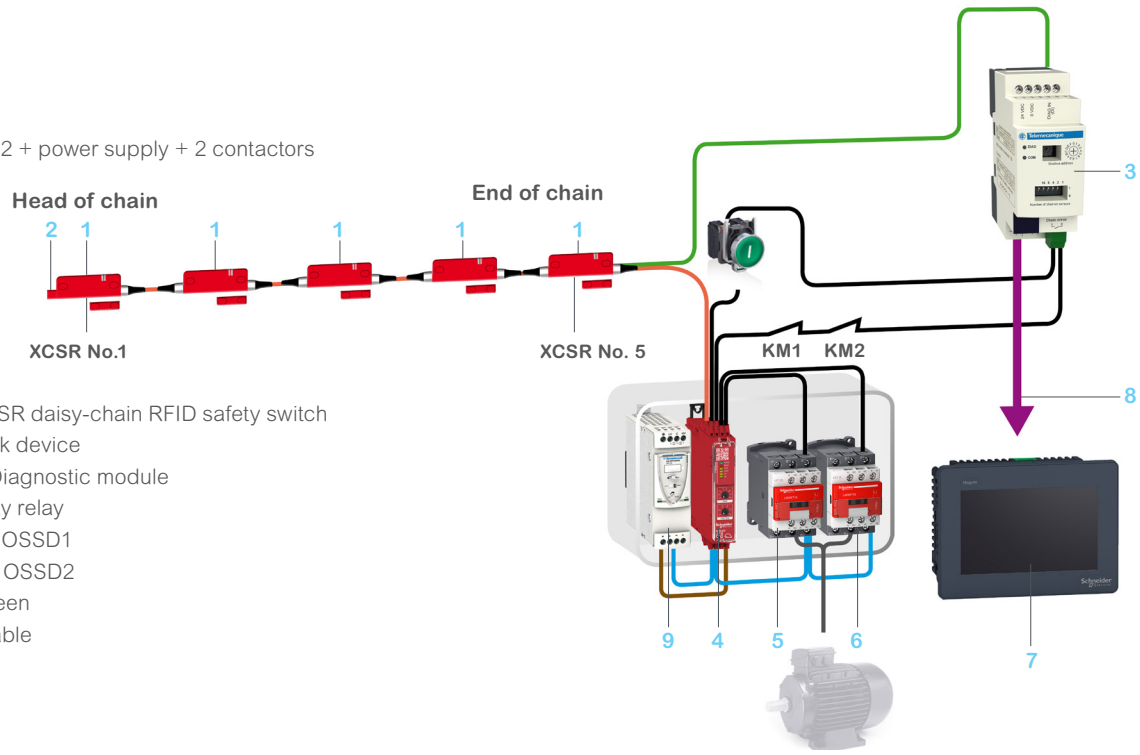

1 **XCSRC●2M12**: XCSR daisy-chain RFID safety switch
2 **XCSRZE**: Loopback device
3 **XCSRD210MDB**: Diagnostic module
4 **XPSUAF●TE**: Safety relay
5 **KM1**: Contactor 1 - OSSD1
6 **KM2**: Contactor 2 - OSSD2
7 HMI with touch screen
8 2xRJ45 Modbus cable
9 Power supply

> XCS safety switches guide your choice

Whatever your activity sector, your type of machine or your automated function, Telemecanique Sensors offers you a complete range of safety switches to meet your protection requirements for functional safety.

Adaptable to your environment

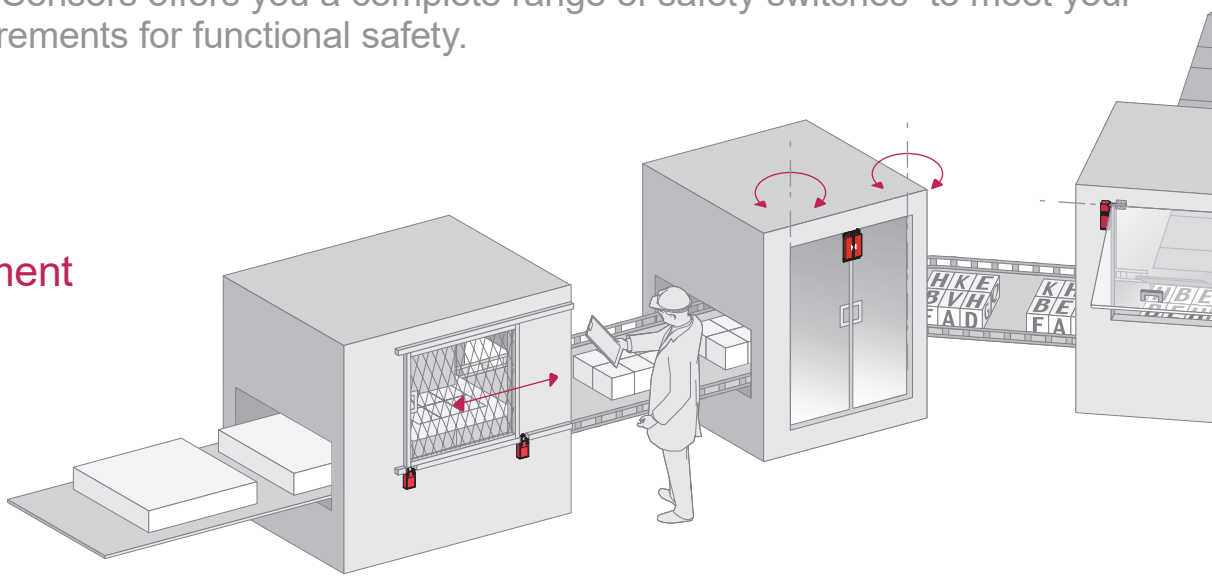

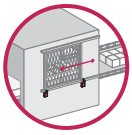





Actuation mode	According to ISO 14119	Mechanical: 5 different actuator heads	Lever or hinge-operated
Non-defeatability	Actuation mode	Actuator protected against manual operation	Mechanical direct connection
Product type and preferred machine architecture by safety level (PL/SIL)	PL=b (category 1) / SIL1		
	PL=d (category 3) / SIL2		
	PL=e (category 4) / SIL3		
Normal environment		XCSP: Plastic body, 3 contacts secured mounting adjustment and cabling access using special screws (XCSM and XCSD also) 	XCSPL: Stainless steel lever, up to 3 contacts 
			XCSPR - XCSTR: Stainless steel spindle operator, for direct axis control, up to 3 contacts 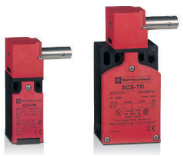
Harsh environment			–
			–
Safety controllers & relay modules			XPSUAF●TE, XPSUAK●TE, XPSUAT●TE,

(1) In combination with an appropriate and correctly connected safety control unit. Refer to the relevant safety standards and product features to determine the

(2) Complete references and other XPS safety control units are available on www.telemecaniquesensors.com

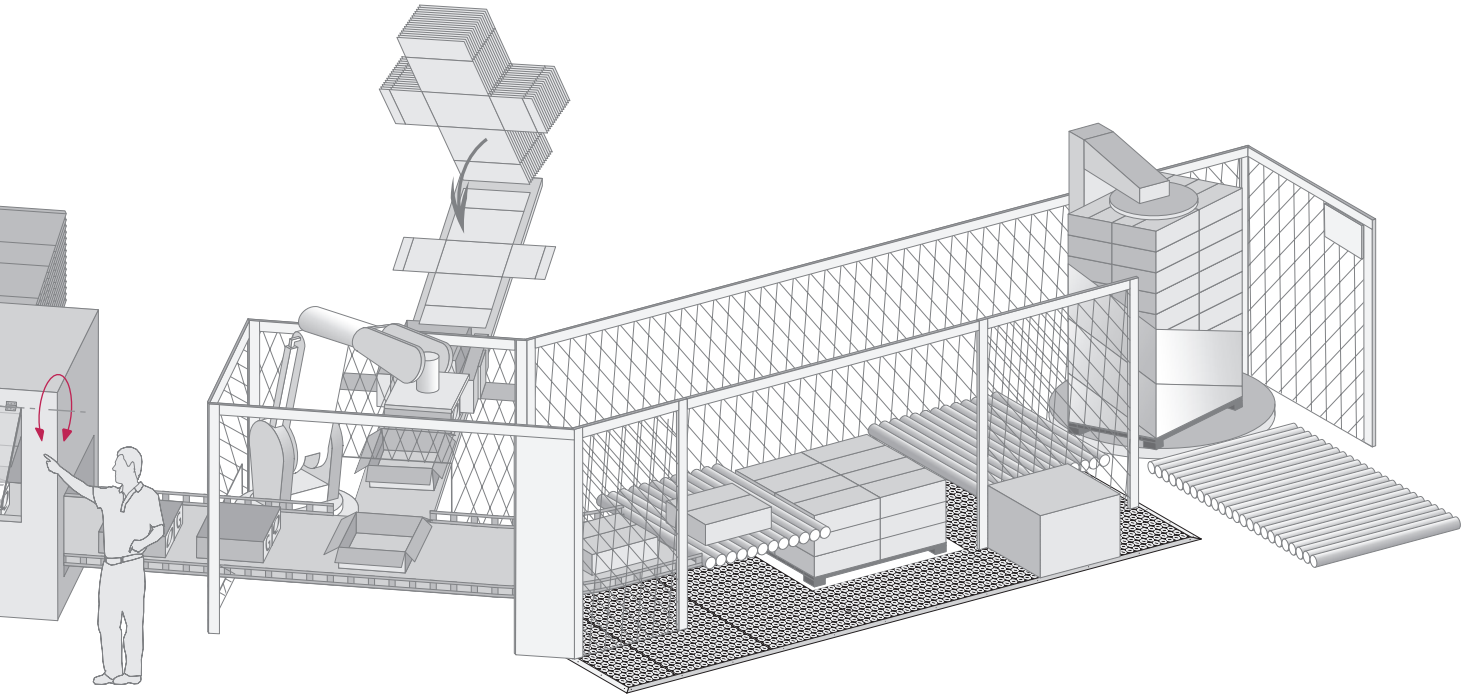

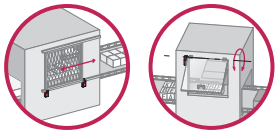

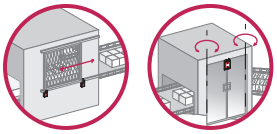

Mechanical using separate key actuators	Mechanical and interlock by separate key manual locking	Mechanical and interlocking using separate key, Solenoid locking/unlocking	Contact-free	
Without solenoid Using special specific key		With solenoid	Using RFID unique code High level of coding	Using coded magnetic key Low level of coding
Architecture 1		–	–	–
Architecture 2				Architecture 3
Architecture 4			Architecture 4, 6, or 7	Architecture 5
XCSPA, XCSTA: Compact plastic body, XCSMP: Miniature key switch with cable output, up to 3 contacts	–	XCSLE: Reinforced plastic body, FZh= 1100N slim dimensions, up to 6 contacts for inertia machines XCSTE: Plastic body, rectangular shape, 3 contacts FZh=500N, for small machines with inertia	–	–
XCSA: Metal body, 3 contacts for protection against accidental impact for controlling heavy doors	XCSB, XCSC: Metal body, 3 contacts, release using pushbutton or key	XCSLF: Slim dimensions, metal body, FZh=2300 N. Up to 6 contacts, reinforced locking for inertia machines in harsh environments XCSE: Metal body, rectangular shape, 5 contacts, FZh=2000N, for inertia machines	XCSR: Thermo-plastic body, 3 versions (standalone, daisy-chain, or single models for point-to-point connection) Suitable for low inertia machines with doors, covers or guards with imprecise alignment. Ideal for dust and liquid environments which may be exposed to impact and vibrations	XCSPA, XCSTA: Compact plastic body
XPSUDN●TE, XPSUS●TE			Not necessary for standalone models. XPSUAF●TE, XPSUAK●TE, XPSUAT●TE, XPSUDN●TE, XPSUS●TE, XPSMCM *(1)(2)* for daisy-chain or single models.	XPSUAK●TE, XPSUAT●TE, XPSUDN●TE, XPSUS●TE, XPSMCM *(1)(2)*

e maximum safety level achievable for the application.

Safety detection solutions
XCS safety switches

Switch type				
Applications			**XCS safety limit switches** **Protection of operators by stopping the machine when the gate is opened.** **All machines with quick rundown time.**	
Design			**Miniature format**	**Compact format**
			Pre-cabled	**With 1 cable entry**
				 
Case			Metal	Plastic	Metal
Features			–		
Conformity to standards	Products		EN/IEC 60947-5-1, EN/ISO 13849-1, EN/IEC 62061, UL 508, CSA C22-2 no. 14		
	Machine assemblies		EN/IEC 60204-1, EN/ISO 14119		
Product certifications			UL, CSA, CCC, EAC		
Dimensions (w x h x d) in mm	Switch		30 x 50 x 16	31 x 34 x 89	
	Fixings	Centers	20	20/22	
Head			Plunger or rotary head Head adjustable in 15° steps through 360° Linear (plunger) or rotary (lever) actuation.		
Contact blocks			NC contacts with positive opening operation		
			2 NC + 1 NO break before make, slow break 2 NC + 1 NO and 2 NC + 2 NO snap action	XCSD: 2 NC + 1 NO break before make, slow break or snap action XCSP: 2 NC + 1 NO snap action	
Degree of protection			IP 66, IP 67 and IP 68	IP 66 and IP 67	
Ambient air temperature	For operation		-25…+70 °C		
Connection	Screw terminals (cable entry via cable gland)		–	Tapped entry for Pg 13.5, ISO M20 cable gland or tapped 1/2" NPT	
	Pre-cabled		L = 1, 2 or 5 m	–	
Type reference			**XCSM**	**XCSP**	**XCSD**
Page			26	32	30

XCS lever or spindle-operated safety switches		
Protection of operators by stopping the machine when the operating lever (attached to hinged machine guard) is displaced by 5°. All light industrial machines fitted with hinged or rotary protective covers with small opening radius.	**Protection of operators by stopping the machine when the guard hinge rotates through 5°. All light industrial machines fitted with hinged access doors.**	
Compact format		
With 1 or 2 cable entries		
		
Plastic, double insulated		
2 types of lever: straight or elbowed (flush with rear of switch) 3 lever positions: to left, center or to right	2 types of spindle: length 30 mm or 80 mm	
EN/IEC 60947-5-1, EN/ISO 13849-1, EN/IEC 62061, UL 508, CSA C22-2 no.14, JIS C4520		
EN/IEC 60204-1, EN/ISO 14119		
UL, CSA, CCC, EAC		
30 x 87.5 x 30	30 x 96 x 30	52 x 117 x 30
20/22	20/22	20/22 or 40.3
Turret head: 4 positions Rotary actuation (lever)	Turret head: 4 positions Rotary actuation (spindle)	
Slow break safety contacts with positive opening operation NC contacts open when lever or spindle displaced by more than 5°		
1 NC + 1 NO break before make 2 NC 1 NC + 2 NO break before make 2 NC + 1 NO break before make	1 NC + 1 NO break before make 2 NC 1 NC + 2 NO break before make 2 NC + 1 NO break before make	1 NC + 2 NO break before make 2 NC + 1 NO break before make 3 NC
IP 67		
-25…+70 °C		
1 tapped entry for Pg 11, ISO M16 cable gland or tapped 1/2" NPT	1 tapped entry for Pg 11, ISO M16 cable gland or tapped 1/2" NPT	2 tapped entries for Pg 11, ISO M16 cable gland or tapped 1/2" NPT
–	–	–
XCSPL	**XCSPR**	**XCSTR**
36		

Safety detection solutions
XCS safety switches

Switch type		**XCS key-operated safety switches**		
Applications		**Protection of operators by stopping the machine when the actuating key (attached to machine guard) is withdrawn from the head of the switch. All light industrial machines with quick rundown time** *(1)*.		
Design		**Miniature format**	**Compact format**	
		Pre-cabled	**With 1 or 2 cable entries**	
				
Features		Without locking of actuating key.	Without locking of actuating key. Optional accessory: guard retaining device.	
Conformity to standards	Products	EN/IEC 60947-5-1, EN/ISO 13849-1, EN/IEC 62061, UL 508, CSA C22-2 no. 14		
	Machine assemblies	EN/IEC 60204-1, EN/ISO 14119		
Product certifications		cULus	UL, CSA, CCC, EAC	
Dimensions (w x h x d) in mm	Switch	30 x 87 x 15	30 x 93.5 x 30	52 x 114.5 x 30
	Fixings	Centers: 20/22	Centers: 20/22	Centers: 20/22 or 40.3
Head		Fixed head: 2 positions for insertion of actuating key.	Turret head: 8 positions for insertion of actuating key.	
Contact blocks		Safety contacts actuated by the actuating key. Slow break and NC positive opening operation.		
		1 NC + 1 NO break before make 2 NC 2 NC + 1 NO break before make 3 NC	1 NC + 1 NO slow break contacts, break before make or make before break, or snap action 2 NC slow break or snap action 2 NC + 1 NO slow break contacts, break before make, or snap action 1 NC + 2 NO slow break contacts, break before make, or snap action	1 NC + 2 NO break before make 2 NC + 1 NO break before make 3 NC
Degree of protection		IP 67		
Ambient air temperature	For operation	-25…+70 °C		
Connection	Screw terminals (cable entry via cable gland)	–	Tapped entry for Pg 11, ISO M16 cable gland or tapped 1/2" NPT	
	Pre-cabled	L = 2, 5 or 10 m	–	–
Type reference		**XCSMP**	**XCSPA**	**XCSTA**
Page		40	44	

(1) Machine stopping time less than time taken for operator to access hazardous zone.

XCS key-operated safety switches

All heavy industrial machines with quick rundown time *(1)*

Industrial format with or without locking

With 1 cable entry, without locking	**With 1 cable entry and manual locking/unlocking**	
		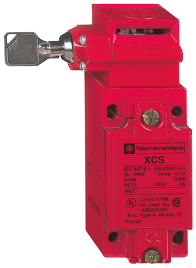
Without locking of actuating key.	Manual locking and unlocking of actuating key by pushbutton (can be mounted on left or right-hand side of switch head).	Manual locking and unlocking of actuating key by key-operated lock (can be mounted on left or right-hand side of switch head).
EN/IEC 60947-5-1, EN/ISO 13849-1, EN/IEC 62061, UL 508, CSA C22-2 no.14		
EN/IEC 60204-1, EN/ISO 14119		
UL, CSA, CCC, EAC		
40 x 113.5 x 44	52 x 113.5 x 44	
30 x 60	30 x 60	
Turret head: 8 positions for insertion of actuating key.	Turret head: 8 positions for insertion of actuating key.	
Safety contacts actuated by the actuating key. Slow break and NC positive opening operation.	Safety contacts actuated by the actuating key. Slow break and NC positive opening operation.	
1 NC + 2 NO break before make 2 NC + 1 NO break before make 3 NC	1 NC + 2 NO break before make 2 NC + 1 NO break before make 3 NC	
IP 67		
-25…+70 °C		
Screw clamp terminals. Tapped entry for Pg 13.5, ISO M20 cable gland or tapped 1/2" NPT	Screw clamp terminals. Tapped entry for Pg 13.5 cable gland, ISO M20 or tapped 1/2" NPT.	
–	–	
XCSA	**XCSB**	**XCSC**
48		

Switch type			**XCS key-operated safety switches, locking and unlocking by solenoid**	
Applications			**Protection of operators by stopping the machine when the actuating key (attached to machine guard) is withdrawn from the head of the switch. All industrial machines with long rundown time** *(1)*	
Design			**Slim format**	
			With 3 cable entries	**With 3 cable entries**
				 
Case			Plastic	Metal
Features			Locking and unlocking of actuating key using a solenoid (either on energization or on de-energization). Manual unlocking (auxiliary release using special tool) of actuating key in abnormal conditions.	Locking and unlocking of actuating key by solenoid (either on energization or on de-energization). Manual unlocking (auxiliary release using key lock) of actuating key in abnormal conditions. 1 Emergency release mushroom head pushbutton (only for XCSLF●●●●4●● and XCSLF●●●●6●●).
Conformity to standards	Products		EN/IEC 60947-5-1, EN/ISO 13849-1, EN/IEC 62061, UL 508 and CSA C22-2 no. 14	
	Machine assemblies		EN/IEC 60204-1, EN/ISO 14119	
Product certifications			UL, CSA, CCC, EAC	
Dimensions (w x h x d or Ø) in mm	Switch		51 x 205 x 43.5	
	Fixings	Centers	30 x 153.3	
Head			Turret head: 8 positions for insertion of actuating key.	
Resistance to forcible withdrawal of the actuator	F_{1max}		1400 N	3000 N
	F_{Zh}		1100 N	2300 N
Contact blocks or outputs			Main safety contacts actuated by the actuating key; auxiliary contacts actuated by solenoid. Contact states given with key inserted and solenoid not energized. Slow break and NC positive opening operation	
	Main contacts		1 NC + 1 NO break before make 2 NC 1 NC + 2 NO break before make 2 NC + 1 NO break before make 3 NC	
	Auxiliary contacts		1 NC + 1 NO break before make 2 NC 1 NC + 2 NO break before make 2 NC + 1 NO break before make 3 NC	
Degree of protection			IP 66/IP 67	
Ambient air temperature	For operation		-25…+60 °C	
	For storage		-40...+70 °C	
Connection	Terminals		Spring terminals, 3 cable entries. Tapped entry for ISO M20 cable gland or tapped 1/2" NPT.	
	Connector		M23 (18 + 1 PE)	
Type reference			**XCSLE**	**XCSLF**
Page			52	

(1) Machine stopping time greater than time taken for operator to access hazardous zone.

XCS key-operated safety switches, locking and unlocking by solenoid (continued)

Protection of operators by stopping the machine when the actuating key (attached to machine guard) is withdrawn from the head of the switch. All industrial machines with long rundown time *(1)*

Rectangular	
–	**With 2 cable entries**
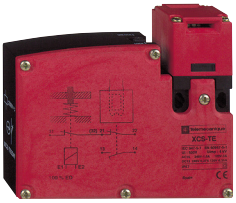	
Plastic, double insulated	Metal
Locking and unlocking of actuator by solenoid (either on de-energization or on energization). Manual unlocking (auxiliary release using special tool) of actuating key in abnormal conditions.	Locking and unlocking of actuating key by solenoid (either on energization or on de-energization). Manual unlocking (auxiliary release using key lock) of actuating key in abnormal conditions.
EN/IEC 60947-5-1, EN/ISO 13849-1, UL 508, CSA C22-2 no. 14, EN/IEC 62061, EN/IEC 60947-1	
EN/IEC 60204-1, EN/ISO 14119	
UL, CSA, CCC, EAC	UL, CSA, CCC, EAC
110 x 93.5 x 33	98 x 146 x 44
30 x 153.3	88 x 95
Turret head: 8 positions for insertion of actuating key	
650 N	2600 N
500 N	2000 N
Main safety contacts actuated by the actuating key; auxiliary contacts actuated by solenoid. Slow break and NC positive opening operation	
1 NC + 1 NO break before make 1 NC + 1 NO make before break 2 NC	1 NC + 2 NO break before make 2 NC + 1 NO break before make 3 NC
1 NC	1 NC + 1 NO 2 NC
IP 67	
-25…+60 °C	-25…+40 °C
-40...+70 °C	-40...+70 °C
Tapped entry for Pg 11 ISO M16 cable gland or tapped 1/2" NPT	Screw clamp terminals. 2 tapped entries for Pg 13.5 ISO M20 cable gland or tapped 1/2" NPT.
–	–
XCSTE	**XCSE**
68	

Switch type			**XCSR contactless RFID safety switches**		
Applications			**Highly tamper-proof protection of operators by stopping the machine when the gate is opened (transfer lines, assembly lines, automated equipment, machine tools, etc.). All light industrial machines fitted with access gates with imprecise guidance and/or subjected to frequent washing, shocks and vibrations. This safety switch is suitable for machine with low inertia.**		
Design			**Standard rectangular format**		
			M12 connector		
					
Case			Thermoplastic housing (Valox TM)		
Features			Contactless system composed of a microprocessor-controlled switch and a transponder factory-paired with a unique code. Multiposition sensor transponder.		
	Assured operating sensing distance (Sao)		15 mm		
	Assured release distance (Sar)		35 mm		
	Type of switch		Standalone RFID switch	Daisy-chain RFID switch for direct series connection	Single RFID switch for point-to-point connection
	Operating mode		Possible functioning without association with a safety control unit (Integrated External Device Monitoring (EDM) and Start/Restart function)	Functioning in combination with a safety control unit PL=e/Cat4 - SIL 3	
Conformity to standards	Products		EN/IEC 60947-5-2, EN/IEC 60947-5-3, UL 508, CSA C22.2 SIL 3 (IEC 61508), SILCL 3 (IEC 62061), PLe–Cat. 4 (EN ISO 13849-1)		
	Machine assemblies		EN/IEC 60204-1, EN/ISO 14119		
	RFID protocol		Based on ISO 15693		
Product certifications			CE, cULus, TÜV, FCC, EAC, IC, RCM, E2, ECOLAB		
Dimensions (w x h x d or Ø) in mm	Switch		30 x 108.3 x 15	30 x 118.6 x 5	30 x 108.3 x 15
	Transponder		50 x 15 x 15		
	Fixings	Centers	–		
		Reader	74…78		
		Transponder	30…34		
Contact blocks or outputs	Safety output		2 OSSDs (Safety outputs PNP NO). OSSDs are in the ON state when the gate is closed		
			Maximum current 400mA	Maximum current 200 mA	
Degree of protection	Conforming to EN/IEC 60529		IP 65, IP 66, IP 67		
	Conforming to DIN 40050		IP 69K		
Ambient air temperature	For operation		-25...+70 °C		
	For storage		-40...+85 °C		
Connection	Pre-cabled		–		
	Connector		1 M12 8-pin connector (A coding)	2 M12 5-pin connector (A coding)	1 M12 5-pin connector (A coding)
	Pigtail		–		
Type reference			**XCSRC●1●M12**	**XCSRC●2M12**	**XCSRC●0M12**
Page			84		

XCSRM contactless RFID safety switches

Highly tamper-proof protection of operators by stopping the machine when the gate is opened (transfer lines, assembly lines, automated equipment, machine tools, etc.).
All light industrial machines fitted with access gates with imprecise guidance and/or subjected to frequent washing, shocks and vibrations. This safety switch is suitable for machine with low inertia.

Miniature rectangular format

Single model	**Advanced model**
	
Polyketone	
Contactless system composed of a microprocessor-controlled switch and a transponder factory-paired with a unique code, also available with a generic code. Multiposition sensor transponder.	
10	
25	
Single RFID switch for point-to-point connection	Suitable for both Standalone by EDM and Daisy-chain connection
Automatic start/restart	Automatic start/restart Manual start/restart Built-in EDM function Daisy-chain connection Diagnostic
EN/IEC 60947-5-2, EN/IEC 60947-5-3, EN ISO 13849-1, IEC 61508, EN IEC 62061, UL 508, CSA C22.2	
EN ISO 14119,	
Low Frequency according to ISO/IEC 18000-2	
CE, cULus, TÜV, FCC, IC, UKCA, ECOLAB	
28.5 x 42 x 18 (pre-cabled or pigtail) 28.5 x 57 x 18 (M12 connector)	
28.5 x 42 x 18	
–	
22	
22	
2 OSSDs : PNP safety outputs	2 OSSDs : 2 PNP safety outputs
Maximum current 300mA	Maximum current 300mA
IP65 and IP67	
IP69K	
-25...+70 °C	
-25...+70 °C	
2, 5, or 10 m cable with 5 flying wires	–
M12 5-pin male connector	M12 8-pin male connector
0.1 m cable with M12 5-pin male connector	0.1 m cable with M12 8-pin male connector
XCSRCM●0●●●	**XCSRCM●3●●●**
96	

Safety detection solutions
XCS safety switches

Switch type			**XCS safety coded magnetic safety switches for detection without contact**	
Applications			**Protection of operators by stopping the machine when the gate is opened All light industrial machines fitted with access gates with imprecise guidance and/or subjected to frequent washing This Safety sensor is suitable for machine with low inertia.**	
Design			**Miniature rectangular format**	**Compact rectangular format**
			Pre-cabled or M8 connector on flying lead	**Pre-cabled or M12 connector on flying lead**
				
Case			Plastic	
Features			3 approach directions	
	Assured operating sensing distance (Sao)		5 mm	8 mm
	Assured release distance (Sar)		15 mm	20 mm
	Type of switch		–	
	Operating mode		–	
Conformity to standards	Products		EN/IEC 60947-5-1, EN/ISO 13849-1, EN/IEC 62061, UL 508 and CSA C22-2 no. 14	
	Machine assemblies		EN/IEC 60204-1, EN/ISO 14119	
	RFID protocol		–	
Product certifications			UL, CSA, EAC, ECOLAB	
Dimensions (w x h x d or Ø) in mm	Switch		16 x 51 x 7	25 x 88 x 13
	Transponder		–	
	Fixings	Centers	16	78
		Reader	–	
		Transponder	–	
Contact blocks or outputs	Safety output		–	
	Contact states given in presence of magnet		1 NC + 1 NO staggered 2 NC staggered Independent Reed-type contacts operated by coded magnet.	1 NC + 1 NO staggered 2 NC staggered 2 NC + 1 NO (NC staggered) 1 NC + 2 NO (NO staggered)
			To be used with safety control units.	
Degree of protection			IP 66 and IP 67 for pre-cabled version, IP 67 for connector on flying lead version	
	Conforming to EN/IEC 60529		–	
	Conforming to DIN 40050		–	
Ambient air temperature	For operation		-25…+85 °C	
	For storage		–	
Connection	Pre-cabled		L = 2, 5 or 10 m	
	Connector		M8, on 0.15 m flying lead	M12, on 0.15 m flying lead
	Conforming to EN/IEC 60947-5-2-A3 and EN/IEC 61076		–	–
Type reference			**XCSDMC**	**XCSDMP**
Page			106	

Protection of operators by stopping the machine when the gate is opened
All light industrial machines fitted with access gates with imprecise guidance and/or subjected to frequent washing
This Safety sensor is suitable for machine with low inertia.

Cylindrical format

Pre-cabled or M12 connector on flying lead



Plastic
1 approach direction
8 mm
20 mm
–
–
EN/IEC 60947-5-1, EN/ISO 13849-1, EN/IEC 62061, UL 508 and CSA C22-2 no. 14
EN/IEC 60204-1, EN/ISO 14119
–
UL, CSA, EAC, ECOLAB
Ø 30, L 38.5
–
–
–
–
–
1 NC + 1 NO staggered 2 NC staggered
To be used with safety control units.
IP 66 and IP 67 for pre-cabled version, IP 67 for connector on flying lead version
-25…+85 °C
–
L = 2, 5 or 10 m
M12, on 0.15 m flying lead
–
XCSDMR
106

Safety detection solutions
Key-operated safety switches

Refer to standards EN/ISO 12100 and EN/ISO 14119 IEC/ISO 13852 and EN/IEC 60204-1

Telemecanique Sensors XCS safety detection solutions conform to EN/ISO 12100 and EN/ISO 14119 standards regarding potentially hazardous machine functions. They meet more specifically the following requirements:
- Removable or movable protective guards must be used in conjunction with locking or interlocking devices,
- For high inertia machines (i.e. with long rundown time), an interlocking device must be used. With a long rundown time, the rundown time is greater than the time it takes for a person to reach the hazardous zone. The interlocking device helps ensure that the guard remains locked until the potentially hazardous movement has stopped.

Safety interlock switches

As required by EN/ISO 12100 and EN/ISO 14119, safety interlock switches which are specifically designed for machine guarding applications provide an ideal solution for the locking or interlocking of movable guards associated with industrial machinery. They also meet the requirements of IEC/ISO 13852 and EN/IEC 60204-1.
They contribute to the protection of operators working on potentially hazardous machines by breaking the start control circuit of the machine when a protective guard is opened or removed, using **positive opening operation contacts**, thus stopping the hazardous movement of the machine.
Removal/opening of the guard (after the hazardous movement has stopped) can either be:
- at the time the machine is switched off for low inertia machines (machines where the rundown time is less than the time it takes for the operator to access the hazardous zone), or
- delayed for high inertia machines (machines where the rundown time is greater than the time it takes for the operator to access the hazardous zone).

Control circuit categories

If used with a safety control unit, the safety interlock switch enables designers to achieve PL=e, category 4 control systems with reference to EN/ISO 13849-1 and SIL CL3 with conformity to EN/IEC 62061. When used on their own or combined with another switch, they can achieve up to category 1, 2 or 3 control circuits (except for RFID XCSR standalone models which can reach PLe-Cat. 4/SIL3 without safety control unit).
Safety related parts of control systems shall be developed taking into account the results of an appropriate Risk Assessment.

Safety of personnel

The start command for the machine can only be initiated following correct operation of the safety interlock switch.
On its release, the NC safety contacts are opened by **positive action** or, for coded magnetic switches, change state (**this should be monitored using a safety control unit)**. RFID XCSR safety switches have 2 OSSDs (Output Signal Switching Devices) which are NC when the guard is closed.

Safety of operation

The safety interlock switches incorporate slow break or snap action contacts with **positive opening operation** (except for coded magnetic switches where this is not possible). For mechanical safety interlock switches, on closing of the guard the actuating key fitted to it enters the head of the switch, operates the multiple interlock device and closes the NC contacts. For coded magnetic switches, the presence of the magnet causes the contacts to change state. For RFID XCSR safety switches, the 2 OSSDs change from ON to OFF state when the guard is being opened.

Safety in use

In order to compensate for mechanical clearance, vibration, etc., all safety interlock switches are designed to accept a few millimeters of misalignment between the actuating key and the switch, or between the magnet and the sensor part for coded magnetic switches, or between the transponder and the reader for RFID XCSR safety switches.

Design to minimize defeat

Mechanically, magnetically or RFID-actuated safety interlock switches are designed to be operated by specific actuating keys so that they cannot be defeated in a simple manner using common tools (rods, metal plates, simple magnets, etc.). When loosening the fixing screws for re-orientation of the turret head on safety interlock switches, the head itself remains attached to the switch body and the contact states remain unchanged.
All safety interlock switches and safety limit switches are designed to avoid any adjustments in the head setting, removal of the actuating key or access to the safety contacts without using the appropriate tool.
There are various methods for obtaining a higher level of tamperproofing, for example:
- using a cage device to help prevent the insertion of a spare actuating key or magnet, or any other foreign body
- fixing the actuating key or coded magnet to the guard by means that make it very difficult to remove (riveting or welding)
- using RFID unique coding XCSR safety switches

Safety detection solutions
Key-operated safety switches

Metal key-operated safety switches - Without solenoid

Without locking of actuating key



XCSA without manual unlocking

Metal case key-operated switches for use on machines **with low inertia** and operating in **normal conditions** (no vibration or shock and guard mounted vertically, without risk of rebound on closing), thus helping to eliminate unintentional opening of the guard.

With locking of actuating key and manual unlocking



XCSB with pushbutton



XCSC with actuating key

Metal case key-operated switches for use on heavy machines **with low inertia** and operating in **arduous conditions** (shock or vibration), whereby the guard could open unintentionally.
A key-operated lock or a pushbutton enables positive locking of the guard and its subsequent unlocking.

Metal safety interlock switches - With solenoid

With interlocking of actuating key by solenoid



XCSLF slim (metal case)

Metal case safety interlock switches for use on machines **with high inertia** with controlled opening of the protective guard.
Locking of the moving guard can either be on de-energization or energization of the solenoid.
Auxiliary release: A key-operated lock enables manual unlocking of the guard from outside the safeguarded area in the event of an interlocking circuit malfunction, and also provides extra safety for maintenance personnel likely to be working on the machine.
The switches incorporate 2 LEDs: one indicating guard “open” and the other, guard “closed and locked” (XCSLF/XCSE).

Emergency release with mushroom head pushbutton



XCSLF with mushroom button

Safety interlock switches are available with a mushroom head pushbutton mounted on the rear of the switch for unlocking the machine guard from inside the safeguarded area.

This manual unlocking using the mushroom head pushbutton for emergency release is useful in the following cases:
- while the machine or a group of machines is undergoing maintenance, enabling operation at reduced speed
- while stopped with the guard(s) closed

The safety of maintenance personnel is thus improved in the event of:
- a power outage
- an interlocking circuit malfunction
- personnel finding themselves in a hazardous situation

Unlocking using the emergency release mushroom head pushbutton takes priority over any other action. It therefore enables a person to leave the zone if the need arises.
This function is reinitialized by turning (with or without a key) the emergency release mushroom head.

Plastic key-operated safety switches - Without solenoid

Without locking of actuating key - Without solenoid



XCSMP



XCSPA



XCSTA

Plastic case safety interlock switches for use on light machines **with low inertia** and operating in **normal conditions.**
For use in arduous conditions (shock or vibration, guard not vertical or risk of rebound on closing) where the guard could open unintentionally, a **guard retaining device (XCSPA or XCSTA)** is available as an accessory.

Plastic safety interlock switches - With solenoid

With interlocking of actuating key by solenoid



XCSLE slim (plastic case)

Plastic case safety interlock switches for use on machines **with high inertia** with controlled opening of the protective guard.
Locking of the moving guard can either be on de-energization or energization of the solenoid.
Auxiliary release: A special tool enables manual unlocking of the guard from outside the safeguarded area in the event of an interlocking circuit malfunction, and also provides extra safety for maintenance personnel likely to be working on the machine.
The switches incorporate 2 LEDs: one indicating guard “open” and the other, guard “closed and locked”(XCSLE).

Safety detection solutions

Lever or spindle-operated safety switches, safety limit switches, coded magnetic switches and contactless RFID safety switches

Rotary lever and spindle-operated switches for hinged or cover guards

With head for rotary movement (lever or spindle)



XCSTR with spindle



XCSPL with lever

Plastic case safety interlock switches with straight or elbowed operating lever or spindle operator.
Specifically designed for small industrial machines with low inertia fitted with small **hinged doors, covers or protective guards**.
They help protect the operator by immediately stopping the hazardous movement of the machine as soon as the rotary lever or spindle displacement reaches an angle of 5°.

Safety limit switches

With head for linear movement (plunger) or rotary movement (lever)



XCSD for rotary movement



XCSM for linear movement

Metal or plastic case limit switches.
For use on machines with low inertia and also on machines with high inertia, when used in conjunction with key-operated safety interlock switches with solenoid for monitoring access doors and/or guards. When used on their own, they are always installed in “positive mode” or combined in pairs, with one switch being in “positive mode” and the other in “negative mode”.

Coded magnetic switches

With an associated coded magnet



XCSDMC, compact format



XCSDMP, standard format



XCSDMR, cylindrical format

Plastic case guard switches for use on machines with low inertia.
Specifically designed for industrial machines fitted with **doors, covers or guards with imprecise guiding**.
They are ideally suited for machines subjected to frequent washing or liquid spray.
They help protect the operator by immediately stopping any hazardous movement, as soon as the distance between the switch and its magnet is greater than 8 or 5 mm, depending on the switch model.

Contactless RFID safety switches

Operated by a digital code



XCSRC, compact design



XCSRM, miniature design

Plastic case switch and transponder for use on machines with low inertia.
Specifically designed for industrial machines fitted with **doors, covers or guards with imprecise guiding.** They are ideally suited for **machines subjected to frequent washing or liquid spray, and exposed to shocks and vibrations.**
Contactless system composed of a microprocessor-controlled switch and a transponder.
The reader and the transponder are factory-paired so as to load into the transponder a unique code shared with the reader. This saved digital code is the unique “key” accepted by the paired reader. **This type of switch is thus difficult to tamper with.**
As long as the transponder is in the reader detection zone (<15 mm), the machine will run normally. When the transponder goes outside the field generated by the reader, the reader stops the machine, indicating that the safety guard is open.

Safety detection solutions
Metal case key-operated safety interlock switches

Actuating keys

The actuating keys are common to all safety interlock switches: metal case XCSLF, XCSE, XCSA, XCSB, XCSC and plastic case XCSLE

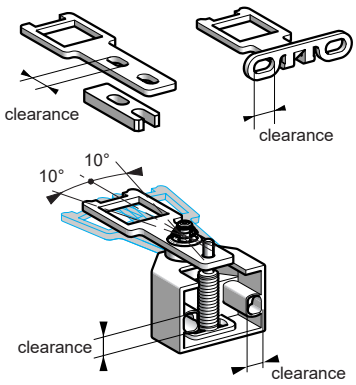

Their oblong fixing holes enable simple adjustment when mounting on moving guards.
A pivoting actuating key (both horizontally and vertically) is available when using safety interlock switches in conjunction with hinged guards or guards with imprecise guiding.
Straight actuating keys are supplied with an adapter shank for simple replacement of legacy **XCKJ or XCSL5/7** safety interlock switches by an **XCSLF/LE** switch, without the need to drill additional fixing holes for the switch or the actuating key.

Turret head

All metal case safety interlock switches are fitted with a square turret head which can be rotated through 360° in 90° steps

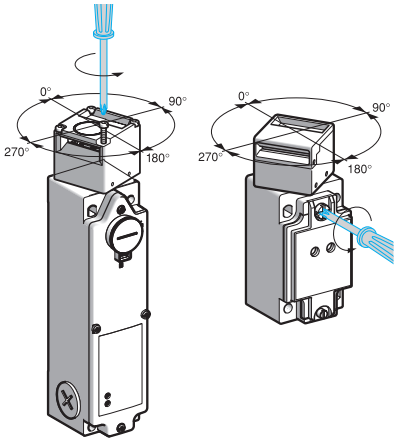

8 directions of actuation are possible for the actuating key:
- 4 in the horizontal plane
- 4 from above the switch (4 alternative positions of the actuating key slot, depending on the orientation of the head).

When loosening the fixing screw(s) for re-orientation of the operating head, the head itself remains attached to the body and the contact states remain unchanged.

Safety (or main) contacts

Metal case safety interlock switches incorporate a **2-pole (XCSLF)** or a **3-pole (XCSLF, XCSE, XCSA, XCSB, XCSC) contact block** with NC contacts with positive opening operation, which is actuated by insertion or withdrawal of the actuating key attached to the guard.

XCSLF

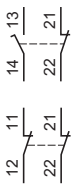

XCSLF, XCSE, XCSA, XCSB, XCSC

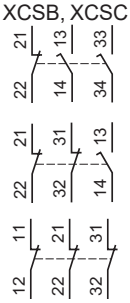

Withdrawal of the actuating key opens the NC safety contact(s), even in the event of the contact sticking or welding.
The 3-pole contact block enables redundant safety circuits to be established (for example: NC + NC or NC + NO) and also to provide signaling (for example: PLC, illuminated beacon, etc.).

Auxiliary contacts

Safety interlocks with solenoid (XCSLF and XCSE) have 2 (XCSLF, XCSE) or 3 auxiliary contacts (XCSLF) for monitoring the solenoid position (locking monitoring) - NC contacts with positive opening operation

LED indicators

An orange LED (optional for XCSA, XCSB and XCSC key-operated switches, standard for XCSLF and XCSE safety interlock switches) **indicates the position of the machine guard**:



LED illuminated: actuating key not inserted in head of switch, NC contact(s) open, guard open.



LED not illuminated: actuating key inserted in head of switch, NC contact(s) closed, guard closed.

A green LED (incorporated on XCSLF, XCSLE, XCSE and XCSTE safety interlock switches) **indicates the locking of the machine guard**:



LED not illuminated: actuating key not inserted in head of switch.
The machine cannot be operated.



LED illuminated: actuating key inserted in head of switch **and actuating key locked**. The machine is either ready for starting, running or decelerating to a standstill.

***Note**: LEDs should be wired in accordance with the schematics indicated in the instruction sheet or in the catalog pages.*

Safety detection solutions
Metal case key-operated safety interlock switches

Manual locking/unlocking by pushbutton or key-operated lock

The pushbutton or key-operated lock fitted to XCSB and XCSC key-operated switches allows manual locking/unlocking of the machine guard

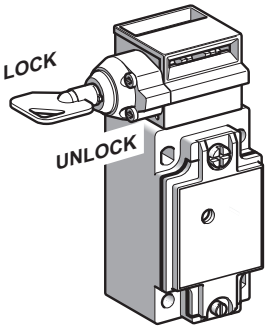

The use of pushbutton or key is not necessary for normal operation of the safety interlock switch (XCSA).
For XCSB and XCSC key-operated switches, when the machine guard is locked (key in "LOCK" position), the resistance to forcible withdrawal of the actuating key fitted to the guard is **F_{Zh} = 1150 N**. The key is removable from the locking device in the "LOCK" position.

Locking/unlocking by solenoid

XCSLF and XCSE safety interlock switches incorporate a solenoid for locking/unlocking of the machine guard

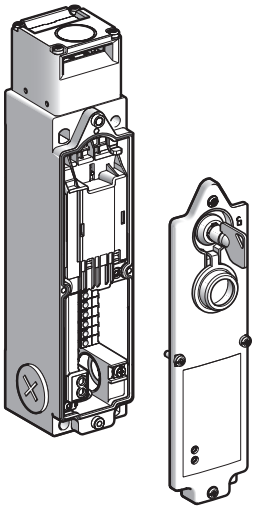

With the machine guard closed and locked, the resistance to forcible withdrawal of the actuating key fitted to the guard is **F_{Zh} = 2300 N** (XCSLF) and **F_{Zh} = 2000 N** (XCSE) (according to EN/ISO 14119 - $F_{Zh} = F_{1max}/1.3$).
In addition to the 2-pole (XCSLF) or 3-pole contacts (XCSLF and XCSE), positively operated by the actuating key fitted to the guard, XCSLF safety interlock switches incorporate **NC + NO** or **2 NC** or **1 NC + 2 NO** or **2 NC + 1NO** or **3NC auxiliary contact blocks mechanically linked to the solenoid (NC + NO or 2 NC for XCSE)**.
The NC contact(s) are for use in the safety circuit of the machine and the NO contact for signaling the status of the solenoid.

Key-operated lock (auxiliary release)

XCSLF and XCSE safety interlock switches are fitted with a key-operated lock allowing unlocking of the machine guard from outside the safeguarded area (for use by authorized personnel only)

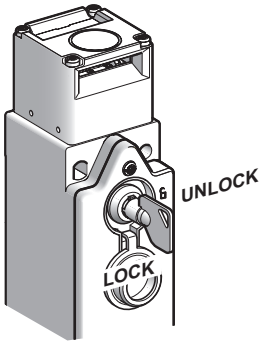

Manual unlocking of the guard using the key-operated lock is useful in the following cases:
- while the machine is undergoing maintenance (with the key turned to the "UNLOCK" position and then removed, the level of protection is higher for helping to prevent an accidental machine start. Safety for maintenance personnel is thus improved):
- in the event of a power outage
- in the event of an interlocking circuit malfunction (interlocked condition maintained: positive safety).

The electrical supply providing unlocking via the solenoid always takes priority over manual unlocking using the key-operated lock.
The lock fitted to standard safety interlock switches has key withdrawal from the "LOCK" and "UNLOCK" positions.

Safety detection solutions
Plastic case key-operated safety interlock switches

Actuating keys

The actuating keys are common to plastic XCSTE, XCSPA and XCSTA key-operated switches (except for XCSMP, see page 40)

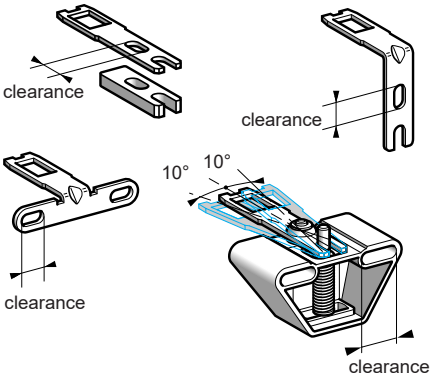

Their oblong fixing holes enable simple adjustment when mounting on moving guards.

A pivoting actuating key (both horizontally and vertically) is available when using safety interlock switches in conjunction with hinged guards or guards with imprecise guiding.

Straight actuating keys are supplied with an adapter shank for simple replacement of a legacy **XCKP** key-operated switch by an **XCSPA** switch, or a legacy **XCKT** key-operated switch by an **XCSTA** switch, without the need to drill additional fixing holes for the switch or the actuating keys.

Turret head

XCSPA, XCSTA, XCSLE and XCSTE safety interlock switches are fitted with a square turret head which can be rotated through 360° in 90° steps. XCSMP safety interlock switches have a fixed head

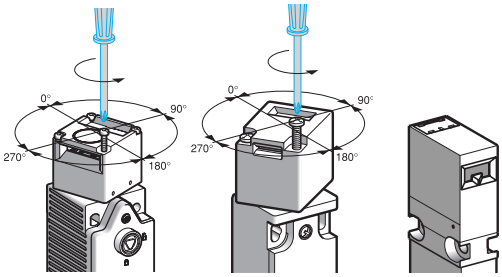

8 directions of actuation are possible for the actuating key:
- 4 in the horizontal plane (1 for **XCSMP**)
- 4 from above the switch (1 for **XCSMP**)
  (4 alternative positions of the actuating key slot, depending on the orientation of the head)

When loosening the fixing screw(s) for re-orientation of the operating head, the head itself remains attached to the body and the contact states remain unchanged.

Safety (or main) contacts

Key-operated switches incorporate either a 2-pole contact block (XCSMP, XCSPA, XCSLE and XCSTE) or a 3-pole contact block (XCSMP, XCSPA, XCSTA, XCSLE and XCSE), with NC contacts with positive opening operation, which is actuated by insertion or withdrawal of the actuating key attached to the guard

XCSLE

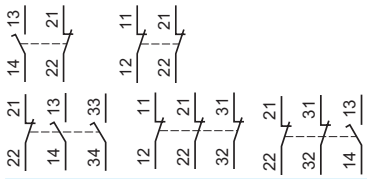

or **XCSTE**

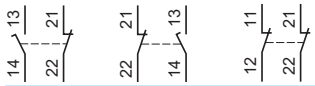

or **XCSPA**

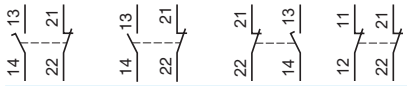

or **XCSPA, XCSTA**

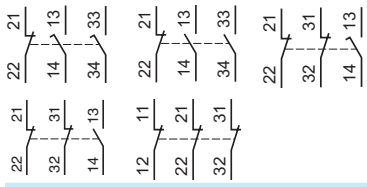

or **XCSMP**

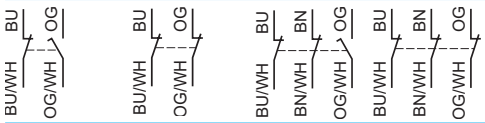

The NC contact(s) are for use in the safety circuit of the machine. Withdrawal of the actuating key opens the NC safety contact(s), even in the event of the contact sticking or welding.
The other NO contact can be used for signaling (for example: PLC, illuminated beacon, etc.).

Auxiliary contacts

Safety interlocks with solenoid (XCSLE and XCSTE) have 1 (XCSTE), 2 or 3 auxiliary contacts (XCSLE) for monitoring the solenoid position (locking monitoring) - NC contacts with positive opening operation

Safety detection solutions
Plastic case key-operated safety interlock switches

Guard retaining device

The XCSZ21 guard retaining device can be used with all XCSPA and XCSTA plastic case key-operated switches that are used in conjunction with either the wide (XCSZ12) or pivoting (XCSZ13) actuating key

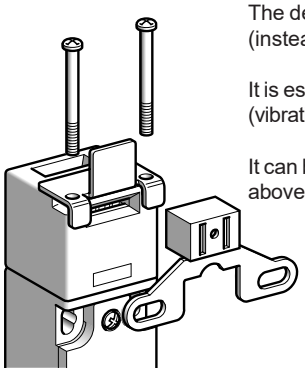

The device maintains the guard closed by providing a retaining force of 50 N (instead of 10 N without guard retaining device).

It is especially suitable for use with light machines operating in arduous conditions (vibration, mechanical shock, guard not vertical, risk of guard rebound on closing, etc.).

It can be used for horizontal actuating key actuation directions, as well as those from above.

Locking/unlocking by solenoid

XCSLE and XCSTE safety interlock switches incorporate a solenoid for locking/unlocking of the machine guard

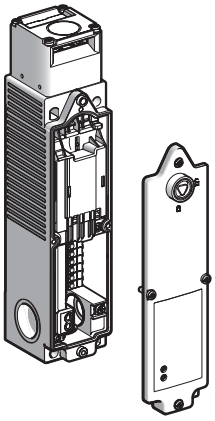

With the machine guard closed and locked, the resistance to forcible withdrawal of the actuating key fitted to the guard is **F_{Zh} = 1100 N** (XCSLE) and **F_{Zh} = 500 N** (XCSTE) (according to EN/ISO 14119 - $F_{Zh} = F_{1max}/1.3$). In addition to the 2-pole (XCSLE, XCSTE) or 3-pole (XCSLE) contact block, positively operated by the actuating key fitted to the guard, the switches incorporate **1 NC (XCSTE), NC + NO or 2 NC (XCSLE) auxiliary contacts mechanically linked to the solenoid**. The NC contact(s) are for use in the safety circuit of the machine.

Unlocking by special tool (auxiliary release)

XCSLF and XCSE safety interlock switches are supplied with a special tool 1 that enables unlocking of the machine guard from outside the safeguarded area (for use by authorized personnel only)

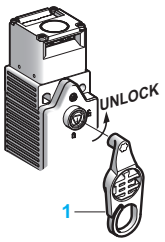

Manual unlocking of the guard using the tool 1 is useful in the following cases:
- while the machine is undergoing maintenance (with the tool turned to the "UNLOCK" position and then removed, the level of protection is higher for helping to prevent an accidental machine start. The safety of maintenance personnel is thus improved)
- in the event of a power outage
- in the event of an interlocking circuit malfunction (interlocked condition maintained: positive safety). The electrical supply providing unlocking via the solenoid always takes priority over manual unlocking using the special tool.

Resilience

XCSLE and XCSLF safety interlock switches provide good resistance to shocks

XCSLE Head against the fixing support: max = 1.2 J
XCSLE Head protuding from the fixing support: max = 4.9 J

XCSLF Head against the fixing support: max = 9.6 J
XCSLF Head protuding from the fixing support: max = 6.4 J

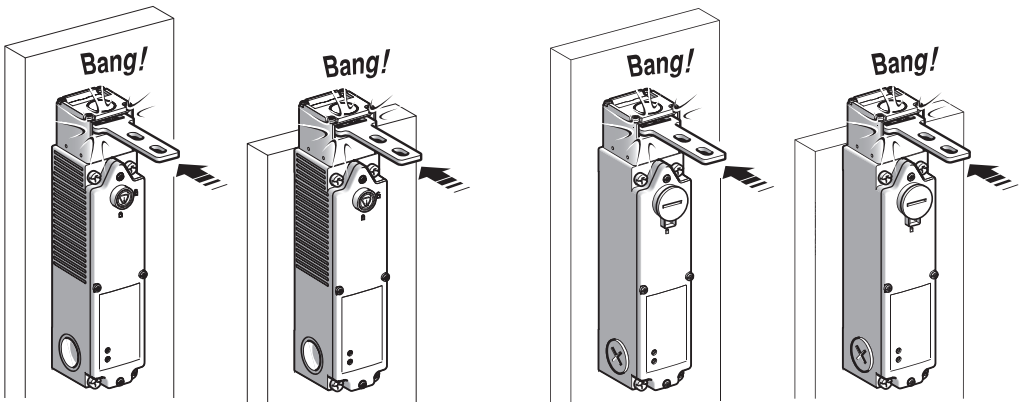

Safety detection solutions
Rotary lever and spindle-operated safety switches

Presentation

Turret head

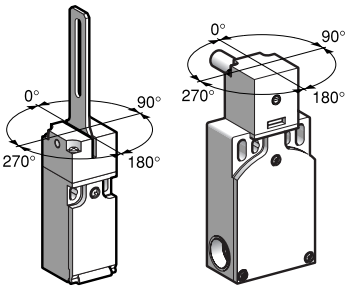

Safety switches for hinged covers or guards, featuring a hinged lever or spindle operator, incorporate a turret head that can be rotated through 360° in 90° steps.
Two additional self-locking screws are included with each switch for positive fixing of the head.

2 types of body

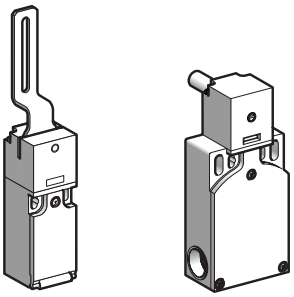

XCSPL *XCSTR*

- Plastic case, narrow, with 1 cable entry for **XCSPL** and **XCSPR**.
- Plastic case, wide, with 2 cable entries for **XCSTR**.

2 types of operating lever, 2 spindle lengths

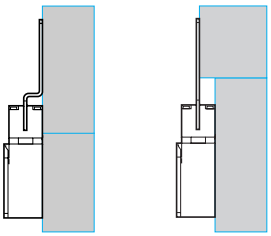

- **Levers**

Straight or elbowed (flush with rear of switch), making the lever switches suitable for use with all types of hinged guard, whether:
- flush with the machine framework (use a switch with an elbowed flush lever)
- overhanging in relation to the machine framework (use a switch with a straight lever)

3 alternative operating lever positions allow the switches to be used with guards that open to the left, center or right.

- **Spindle operators**

2 spindle lengths: 30 or 80 mm.

Safety contacts

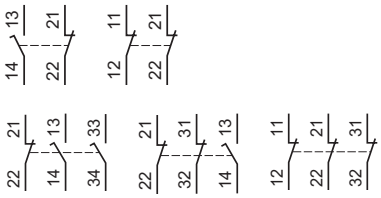

XCSPL and **XCSPR** safety switches incorporate a 2-pole or 3-pole contact block - NC contacts with positive opening operation. The contact arrangements can be: NC + NO break before make, 2 NC, 1 NC + 2 NO break before make or 2 NC + 1 NO break before make.

XCSTR safety switches incorporate a 3-pole contact block - NC contacts with positive opening operation. The contact arrangements can be:
1 NC + 2 NO break before make, 2 NC + 1 NO break before make or 3 NC. Opening of the NC safety contact(s) occurs when the operating lever or spindle is displaced by an angle equal to or greater than 5°.

Applications

These safety switches provide a solution for monitoring **hinged protective guards** with small opening radius on machines with low inertia (quick rundown time).
They are especially suitable for existing machines which need to be brought in line with the latest standards and directives since they can be used in conjunction with existing covers, including those whose mounting is somewhat imprecise.
Mounting of the safety switch improves the machine operator's level of safety by limiting opening of the protective guard and reducing the risk of touching any moving parts before they have come to a stop.

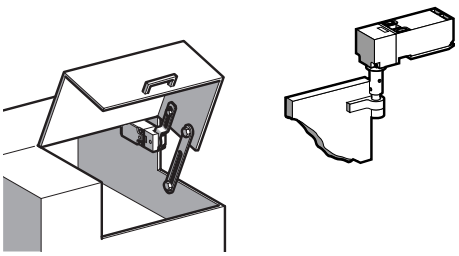

Safety detection solutions
Coded magnetic safety interlock swiches and contactless RFID safety switches

Presentation

Coded magnetic switches



XCSDMC
Compact format



XCSDMP
Standard format



XCSDMR
Cylindrical format

Contactless RFID safety switches



Standard size, standalone or single model

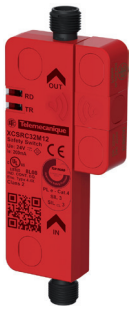

Standard size, daisy-chain model



Miniature size, single mode



Splitter connector for daisy-chain configuration

3 types of case

- PBT plastic body
- Compact rectangular, **XCSDMC**
- Standard rectangular, **XCSDMP**
- Cylindrical Ø 30, **XCSDMR**
- Pre-cabled, length 2 m, 5 m or 10 m
- Connector on flying lead connection:
  - M8: DMC
  - M12: DMP, DMR

Contacts

Coded magnetic switches are fitted with 2-pole (**XCSDMC/XCSDMR/XCSDMP**) or 3-pole (**XCSDMP**) Reed type contacts and are available with or without a "guard closed" LED indicator.
The NC and NO contacts change state as soon as the magnet is at a distance from the sensor of approximately 8 mm for **XCSDMP** and **XCSDMR** switches and approximately 5 mm for **XCSDMC** switches.
Coded magnetic switches have a low level of coding according to EN/ISO 14119.

Connection

When used in safety circuits, the Reed technology contacts must always be used in conjunction with a safety control unit.

Standard and miniature sizes

- Standard size: 30 x 108.3 x 15 mm (w x h x d), for standalone model
- Miniature size: 28.5 x 57 x 18 mm

3 model types

- Standalone model, with embedded EDM (external device monitoring) and start/restart function
- Model for series connection (daisy-chain)
- Model for point-to-point connection

Features

- Thermoplastic housing (Valox™) or nylon (polyketone)
- Connector:
  - M12 8-pin for standalone
  - 2 x M12 5-pin for daisy-chain model and M12 5-pin for point-to-point connection
- For miniature design: additional safety inputs, unlimited pairing capability

Technology

Contactless RFID protocol.
Embedded EDM (external device monitoring) for standalone model (no need for safety control unit); diagnosis of the whole daisy chain of switches possible using the diagnostic module; point-to-point connection to a safety controller or safety PLC.

High level of coding (according to EN/ISO 14119)

- Reader and transponder are factory-paired with a unique code

Applications

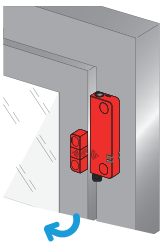

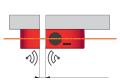

Contactless safety switches are specifically designed for industrial machines fitted with **doors, covers or guards with imprecise guiding.**
They are ideally suited for machines subjected to frequent washing or liquid spray, and for XCSR RFID safety switches, exposed to knocks and vibrations.

Presentation

XCSM safety limit switches

With head for linear movement (plunger) or rotary movement (lever)


With metal end plunger


With steel roller plunger


With thermoplastic roller lever

- **XCSM** miniature metal case
- With protective plate, helping to prevent both access to the fixing screws and adjustment of the head by unauthorized personnel
- Torx fixing screws
- A removable cable entry to facilitate wiring

Contacts

XCSM3 limit switches are fitted with 3-pole contacts (2 NC + 1 NO snap or slow break) and **XCSM4** switches are fitted with 4-pole contacts (2 NC + 2 NO snap) - NC contacts with positive opening operation.
4 versions of complete switches are available incorporating these contacts:
- metal end plunger
- roller plunger
- thermoplastic roller lever
- 19 mm diameter steel roller lever

Connection

Pre-cabled switches, either 7 x 0.5 mm² (3-pole contacts) or 9 x 0.34 mm² (4-pole contacts).

XCSD and XCSP safety limit switches

With head for linear movement (plunger) or rotary movement (lever)


With metal end plunger


With steel roller plunger


With thermoplastic roller lever

- **XCSD** compact metal case and **XCSP** plastic case
- With protective plate, helping to prevent both access to the fixing screws and adjustment of the head by unauthorized personnel
- Torx fixing screws
- A removable cable entry to facilitate wiring

Contacts

XCSP39●●● and **XCSD3●●●●** limit switches are fitted with 3-pole contacts.
2 NC + 1 NO snap action or slow break for **XCSD3**; 2 NC + 1 NO snap action for **XCSP39** (NC contacts with positive opening operation)
4 versions of complete switches are available incorporating these contacts:
- metal end plunger
- roller plunger
- thermoplastic roller lever
- 19 mm diameter steel roller lever

Applications

These switches provide a solution for monitoring covers, guards or grids. For use on machines with low inertia (quick rundown time) and also on machines with high inertia (long rundown time) when used in conjunction with key-operated safety interlock switches with solenoid.

When used on their own, they are always installed in “positive mode” or combined in pairs, with one switch being in “positive mode” and the other in “negative mode”, and can, when connected to safety control units, achieve a PL=e, category 4/SIL 3 system.

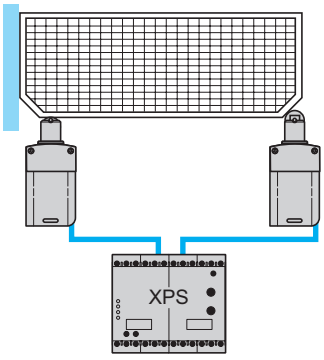

Safety detection solutions
Safety limit switches
XCSM miniature design, metal

XCSM
pre-cabled

With head for linear movement (plunger). Fixing by the body

103983



XCSM with plunger

Page 26

With head for rotary movement (lever). Fixing by the body

107892



XCSM with lever

Page 26

Safety detection solutions
Safety limit switches
XCSM miniature design, metal

Environmental characteristics		
Conformity to standards	Products	EN/IEC 60947-5-1, UL 508, CSA C22-2 no. 14
	Machine assemblies	EN/IEC 60204-1, EN/ISO 14119
Product certifications		UL, CSA, CCC, EAC
Maximum safety level *(1)*		PL=e, category 4 conforming to EN/ISO 13849-1 and SIL CL3 conforming to EN/IEC 62061
Reliability data B_{10D}		50,000,000 (value given for a service life of 20 years, limited by mechanical or contact wear)
Ambient air temperature		For operation: -25...+70 °C For storage: -40…+70 °C
Vibration resistance		XCSM snap action: 5 gn. XCSM slow break: 25 gn (10…500 Hz) conforming to EN/IEC 60068-2-6
Shock resistance		25 gn (18 ms) conforming to EN/IEC 60068-2-27
Electric shock protection		Class I conforming to EN/IEC 61140
Degree of protection		IP 66, IP 67 and IP 68 *(2)* conforming to EN/IEC 60529; IK 06 conforming to IEC 62262
Materials		Body: Zamak. Head: Zamak. Protective plate: steel, fixed with 5-lobe torque safety screws. Cable: PVC.
Repeat accuracy		0.05 mm on the tripping points, with 1 million operating cycles for head with end plunger

Contact block characteristics	
Rated operational characteristics	∼ AC-15; C300 (Ue = 240 V, Ie = 0.75 A) ⎓ DC-13; R300 (Ue = 250 V, Ie = 0.1 A), conforming to EN/IEC 60947-5-1 Appendix A
Conventional thermal current in enclosure	3 snap action contact and 3 slow break contact versions: Ithe = 4 A 4 snap action contact version: Ithe = 3 A
Rated insulation voltage	Ui = 400 V degree of pollution 3 conforming to EN/IEC 60947-5-1 Ui = 300 V conforming to UL 508, CSA C22-2 no. 14
Rated impulse withstand voltage	U imp = 4 kV conforming to EN/IEC 60947-1, EN/IEC 60664
Positive operation (depending on model)	NC contacts with positive opening operation conforming to IEN/IEC 60947-5-1 Appendix K
Resistance across terminals	≤ 25 mΩ conforming to EN/IEC 60255-7 category 3
Short-circuit protection	6 A cartridge fuse type gG (gl)
Minimum actuation speed	Snap action contact: 0.01 m/minute, Break before make, slow break contact: 6 m/minute

(1) Using an appropriate and correctly connected safety control unit.
(2) Protection against prolonged immersion: the test conditions are subject to agreement between the manufacturer and the user.

Electrical durability

- Conforming to EN/IEC 60947-5-1 Appendix C
- Utilization categories AC-15 and DC-13
- Maximum operating rate: 3,600 operating cycles/hour
- Load factor: 0.5

AC supply
50/60 Hz ∼
inductive circuit

XCSM snap action (2 NC + 1 NO, 2 NC + 2 NO contact)

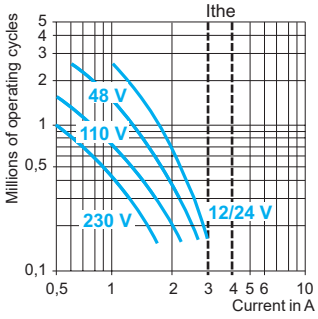

XCSM slow break (2 NC + 1 NO contact)

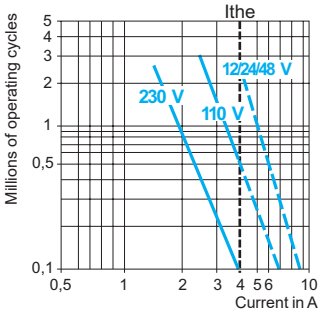

DC supply ⎓
Power broken in W for 5 million operating cycles

Voltage	V	24	48	120
⎓	W	3	2	1

Power broken in W for 5 million operating cycles

Voltage	V	24	48	120
⎓	W	4	3	3

(1) Protection against prolonged immersion: the test conditions are subject to agreement between the manufacturer and the user.

Safety detection solutions

Safety limit switches

XCSM miniature design, metal

Pre-cabled

Type of head	Plunger (fixing by the body)		Rotary (fixing by the body)	
				
Type of operator	Metal end plunger	Roller plunger	Thermoplastic roller lever	Steel roller lever
References (⊖ NC contact with positive opening operation)				
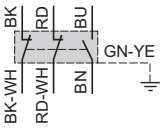 **3-pole 2 NC + 1 NO snap action contact**	**XCSM3910L1** ⊖ 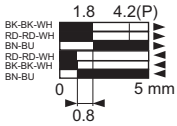	**XCSM3902L1** ⊖ 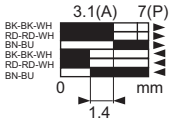	**XCSM3915L1** ⊖ 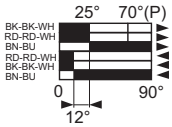	**XCSM3916L1** ⊖ 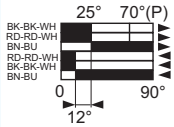
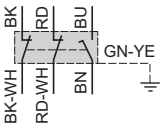 **3-pole 2 NC + 1 NO break before make, slow break contact**	**XCSM3710L1** ⊖ 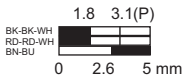	**XCSM3702L1** ⊖ 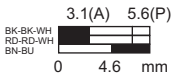	**XCSM3715L1** ⊖ 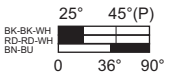	**XCSM3716L1** ⊖ 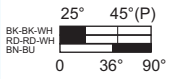
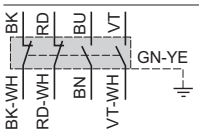 **4-pole 2 NC + 2 NO snap action contact**	**XCSM4110L1** ⊖ 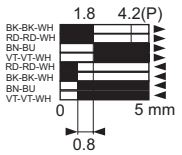	**XCSM4102L1** ⊖ 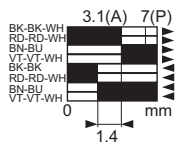	**XCSM4115L1** ⊖ 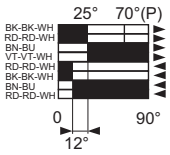	**XCSM4116L1** ⊖ 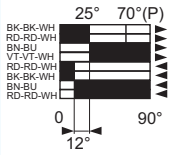
Weight (kg)	0.165	0.170	0.205	0.210
Contact operation	■ *closed* □ *open*		*(A) = cam displacement* *(P) = positive opening point* ⊖ *NC contact with positive opening operation*	

Complementary characteristics not shown under general characteristics (page 25)

Switch actuation		On end	By 30° cam	
Type of actuation				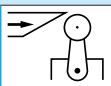
Maximum actuation speed		0.5 m/s	0.5 m/s	1.5 m/s
Mechanical durability		10 million operating cycles		
Minimum force or torque	Tripping	8.5 N	7 N	0.5 N.m/*4.42 lb-in*
	Positive opening	42.5 N	35 N	0.1 N.m/*0.88 lb-in*
Cabling	3-pole contacts	PVC pre-cabled, 7 x 0.5 mm², length 1 m *(1)*		
	4-pole contacts	PVC pre-cabled, 9 x 0.34 mm², length 1 m *(1)*		

(1) For a 2 m long cable, replace L1 with L2.
For a 5 m long cable, replace L1 with L5.

Safety detection solutions
Safety limit switches
XCSM miniature design, metal
Pre-cabled

Dimensions

XCSM●●10L1

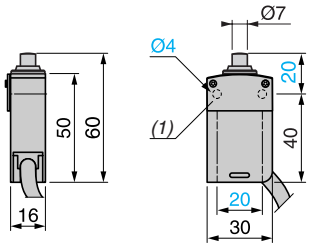

(1) Protective plate fixed by 5-lobe torque safety screws.

XCSM●●02L1

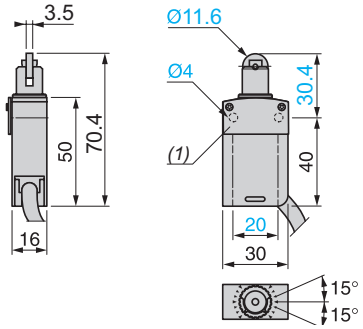

XCSM●●15L1

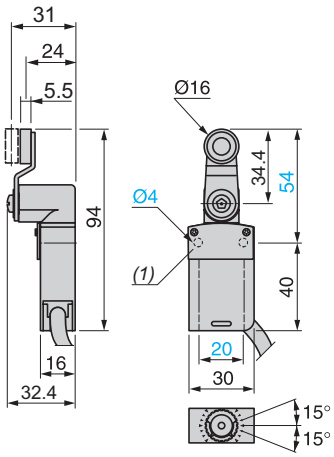

XCSM●●16L1

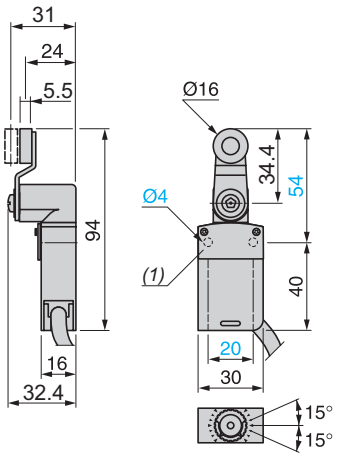

(1) Protective plate fixed by 5-lobe torque safety screws.

Connections

Wiring up to PL = b, category 1 conforming to EN/ISO 13849-1

Example with 3-pole 2 NC + 1 NO contact and protection fuse to help prevent shunting of the N/C contacts, due to either cable damage or tampering.

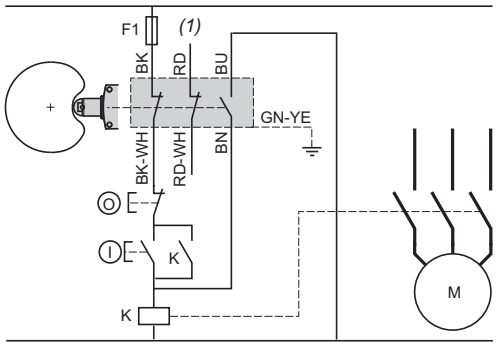

(1) Signaling contact

Wiring up to PL = d, category 3 conforming to EN/ISO 13849-1

Example with 3-pole 2 NC + 1 NO contact with mixed redundancy of the contacts and the associated control relays. Opening and closing of the guard necessary to activate K1.

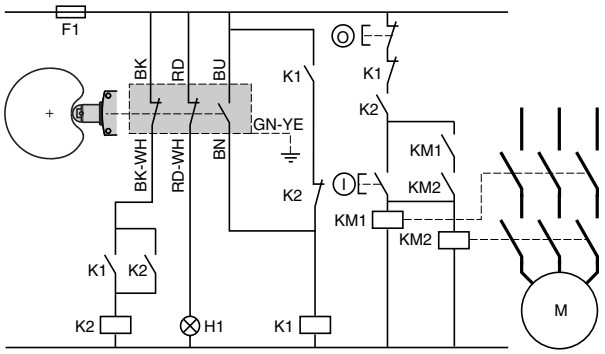

H1: “Guard closed” indicator light

Example of guard monitoring using 2 switches and 1 safety control unit (PL=e, category 4 conforming to EN/ISO 13849-1)
Operation in positive and negative (combined) mode

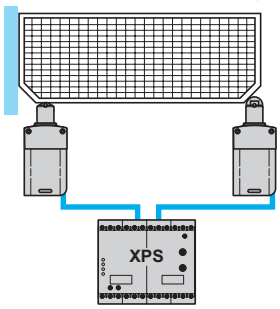

Safety detection solutions

Safety limit switches
Compact design
XCSD, metal
XCSP, plastic

■ XCSD, XCSP
with 1 cable entry
Conforming to standard EN 50047

With head for linear movement (plunger)

XCSD



Metal end plunger



Roller plunger

Page 30

XCSP



Metal end plunger



Roller plunger

Page 32

With head for rotary movement (lever)

XCSD



Thermoplastic roller lever



Steel roller lever

Page 30

XCSP



Thermoplastic roller lever



Steel roller lever

Page 32

Safety detection solutions

Safety limit switches
Compact design
XCSD, metal
XCSP, plastic

Environmental characteristics

Conformity to standards	Products	EN/IEC 60947-5-1, UL 508, CSA C22-2 no. 14
	Machine assemblies	EN/IEC 60204-1, EN/ISO 14119
Product certifications		UL, CSA, CCC, EAC
Maximum safety level *(1)*		PL=e, category 4 conforming to EN/ISO 13849-1 and SIL CL3 conforming to EN/IEC 62061
Reliability data B_{10D}		50,000,000 (value given for a service life of 20 years, limited by mechanical or contact wear)
Ambient air temperature	For operation	-25…+70 °C
	For storage	-40…+70 °C
Vibration resistance	Conforming to EN/IEC 60068-2-6	25 gn (10…500 Hz)
Shock resistance	Conforming to EN/IEC 60068-2-27	50 gn (11 ms)
Electric shock protection		Class I conforming to EN/IEC 61140 for **XCSD**
		Class II conforming to EN/IEC 61140 for **XCSP**
Degree of protection	Conforming to EN/IEC 60529	**IP 66 and IP 67**
	Conforming to IEC 62262	**IK 06 for XCSD** **IK 04 for XCSP**
Repeat accuracy		0.1 mm on the tripping points, with 1 million operating cycles for head with end plunger
Cable entry	Depending on model	Tapped entry for Pg 13.5 cable gland, tapped ISO M20 x 1.5 or tapped 1/2" NPT
Materials		**XCSD**: Zamak bodies and heads, **XCSP**: plastic bodies, Zamak heads Plastic protective cover, fixed with 5-lobe torque safety screws

Contact block characteristics

Rated operational characteristics	∼ AC-15; B300 (Ue = 240 V, Ie = 1.5 A) ⎓ DC-13; R300 (Ue = 250 V, Ie = 0.1 A), conforming to EN/IEC 60947-5-1 Appendix A
Conventional thermal current in enclosure	3 snap action contact and 3 slow break contact versions: Ithe = 6 A
Rated insulation voltage	Ui = 400 V degree of pollution 3 conforming to IEN/IEC 60947-1 Ui = 300 V conforming to UL 508, CSA C22-2 no. 14
Rated impulse withstand voltage	U imp = 4 kV conforming to EN/IEC 60947-1, EN/IEC 60664
Positive operation (depending on model)	NC contacts with positive opening operation conforming to IEN/IEC 60947-5-1 Appendix K
Resistance across terminals	≤ 25 mΩ conforming to EN/IEC 60255-7 category 3
Short-circuit protection	6 A cartridge fuse type gG (gl)
Connection (screw clamp terminals)	Clamping capacity, min: 1 x 0.34 mm^2, max: 1 x 1 mm^2 or 2 x 0.75 mm^2
Minimum actuation speed (for head with end plunger) — Snap action	0.01 m/minute
Minimum actuation speed (for head with end plunger) — Slow break	6 m/minute

(1) Using an appropriate and correctly connected safety control unit.

Electrical durability

- Conforming to EN/IEC 60947-5-1 Appendix C
- Utilization categories AC-15 and DC-13
- Maximum operating rate: 3,600 operating cycles/hour
- Load factor: 0.5

AC supply
50/60 Hz ∼
⎓ inductive circuit

Snap action contacts

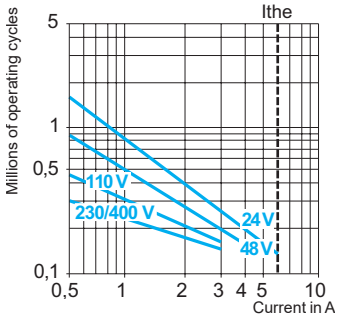

Slow break contacts

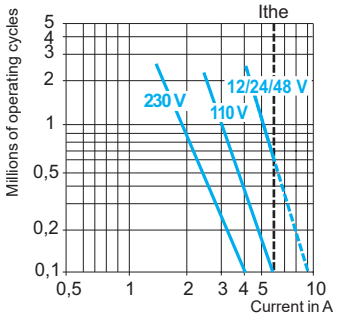

DC supply ⎓
Power broken in W for 5 million operating cycles.

Voltage	V	24	48	120
⎓	W	3	2	1

Voltage	V	24	48	120
⎓	W	4	3	2

Safety detection solutions

Safety limit switches

XCSD compact design, metal

Complete switches, 1 cable entry

Type of head	Plunger		Rotary	
				
Type of operator	Metal end plunger	Steel roller plunger	Thermoplastic roller lever	Steel roller lever
References of complete switches with 3-pole 2 NC + 1 NO snap action contact (⊖ NC contact with positive opening operation)				
With ISO M20 x 1.5 cable entry				
	XCSD3910P20 ⊖	**XCSD3902P20** ⊖	**XCSD3918P20** ⊖	**XCSD3919P20** ⊖
With Pg 13.5 cable entry				
	XCSD3910G13 ⊖	**XCSD3902G13** ⊖	**XCSD3918G13** ⊖	**XCSD3919G13** ⊖
With 1/2" NPT cable entry				
	XCSD3910N12 ⊖	**XCSD3902N12** ⊖	**XCSD3918N12** ⊖	**XCSD3919N12** ⊖
Weight (kg)	0.215	0.220	0.255	0.255

Contact function diagrams

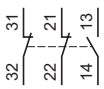

3-pole 2 NC + 1 NO snap action

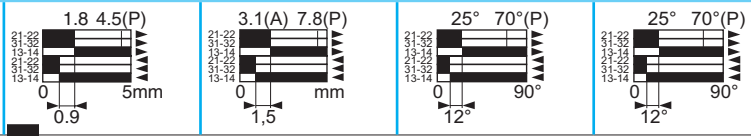

Contact operation

closed
open
(A) = cam displacement
(P) = positive opening point
⊖ NC contact with positive opening operation

Characteristics

Switch actuation		On end	By 30° cam	
Type of actuation				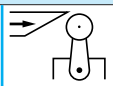
Maximum actuation speed		0.5 m/s		1.5 m/s
Mechanical durability (in millions of operating cycles)		15	10	
Minimum force or torque	For tripping	15 N	12 N	0.1 N.m/*0.88 lb-in*
	For positive opening	45 N	36 N	0.25 N.m/*2.21 lb-in*
Cable entry		1 entry tapped M20 x 1.5 mm for ISO cable gland, clamping capacity 7 to 13 mm 1 entry tapped for Pg13.5 cable gland, clamping capacity 9 to 12 mm 1 entry tapped for 1/2" NPT conduit		

Dimensions

XCSD3●10●●●

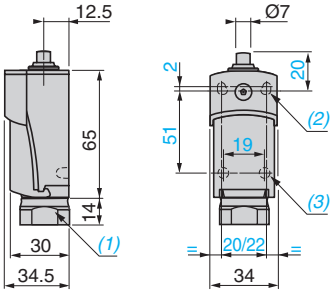

XCSD3●02●●●

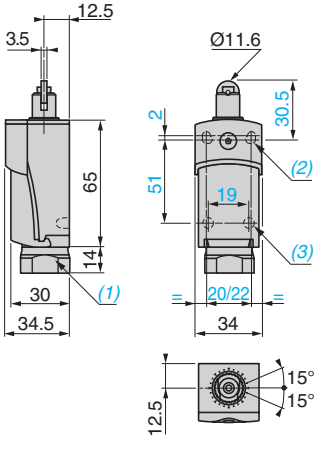

(1) Tapped entry for ISO M20 x 1.5 or Pg 13.5 cable gland or tapped 1/2" NPT.
(2) 2 elongated holes Ø 4.3 x 6.3 mm on 22 mm centers, 2 holes Ø 4.3 on 20 mm centers.
(3) 2 x Ø 3 holes for support studs, depth 4 mm.

Safety detection solutions
Safety limit switches
XCSD compact design, metal
Complete switches, 1 cable entry

Type of head	Plunger		Rotary	
				
Type of operator	Metal end plunger	Steel roller plunger	Thermoplastic roller lever	Steel roller lever
References of complete switches with 3-pole 2 NC + 1 NO break before make, slow break contact (⊖ NC contact with positive opening operation)				
With ISO M20 x 1.5 cable entry				
	XCSD3710P20 ⊖	**XCSD3702P20** ⊖	**XCSD3718P20** ⊖	**XCSD3719P20** ⊖
With Pg 13.5 cable entry				
	XCSD3710G13 ⊖	**XCSD3702G13** ⊖	**XCSD3718G13** ⊖	**XCSD3719G13** ⊖
With 1/2" NPT cable entry				
	XCSD3710N12 ⊖	**XCSD3702N12** ⊖	**XCSD3718N12** ⊖	**XCSD3719N12** ⊖
Weight (kg)	0.215	0.220	0.255	0.255

Contact function diagrams

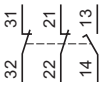

3-pole 2 NC + 1 NO
break before make, slow break



Contact operation

closed
open
(A) = cam displacement
(P) = positive opening point
⊖ NC contact with positive opening operation

Characteristics

Switch actuation		On end	By 30° cam	
Type of actuation				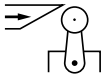
Maximum actuation speed		0.5 m/s		1.5 m/s
Mechanical durability (in millions of operating cycles)		15	10	
Minimum force or torque	For tripping	15 N	12 N	0.1 N.m/*0.88 lb-in*
	For positive opening	45 N	36 N	0.25 N.m/*2.21 lb-in*
Cable entry		1 entry tapped M20 x 1.5 mm for ISO cable gland, clamping capacity 7 to 13 mm 1 entry tapped for Pg13.5 cable gland, clamping capacity 9 to 12 mm 1 entry tapped for 1/2" NPT conduit		

Dimensions

XCSD3●18●●●, XCSD3●19●●●

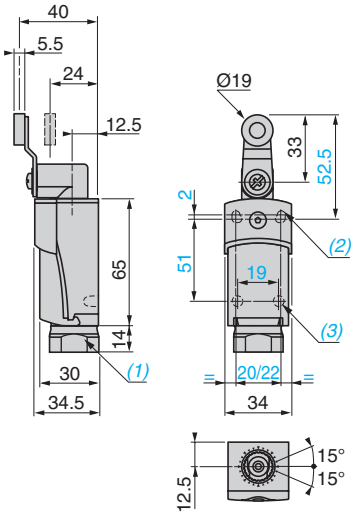

(1) Tapped entry for ISO M20 x 1.5 or Pg 13.5 cable gland or tapped 1/2" NPT.
(2) 2 elongated holes Ø 4.3 x 6.3 mm on 22 mm centers, 2 holes Ø 4.3 on 20 mm centers.
(3) 2 x Ø 3 holes for support studs, depth 4 mm.

Safety detection solutions
Safety limit switches
XCSP compact design, plastic
Complete switches, 1 cable entry

Type of head	Plunger		Rotary	
				
Type of operator	Metal end plunger	Steel roller plunger	Thermoplastic roller lever	Steel roller lever
References of complete switches with 3-pole 2 NC + 1 NO snap action contact (⊖ NC contact with positive opening operation)				
With ISO M20 x 1.5 cable entry				
	XCSP3910P20 ⊖	**XCSP3902P20** ⊖	**XCSP3918P20** ⊖	**XCSP3919P20** ⊖
With Pg 13.5 cable entry				
	XCSP3910G13 ⊖	**XCSP3902G13** ⊖	**XCSP3918G13** ⊖	**XCSP3919G13** ⊖
With 1/2" NPT cable entry				
	XCSP3910N12 ⊖	**XCSP3902N12** ⊖	**XCSP3918N12** ⊖	**XCSP3919N12** ⊖
Weight (kg)	0.215	0.220	0.255	0.255

Contact function diagrams

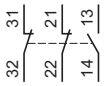

3-pole 2 NC + 1 NO snap action

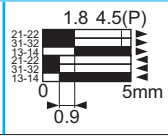

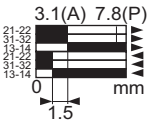

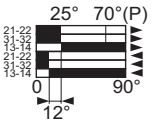

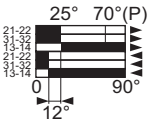

Contact operation

closed
open

(A) = cam displacement
(P) = positive opening point

⊖ NC contact with positive opening operation

Safety detection solutions
Safety limit switches
XCSP compact design, plastic
Complete switches, 1 cable entry

Characteristics

Switch actuation		On end	By 30° cam	
Type of actuation				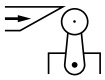
Maximum actuation speed		0.5 m/s		1.5 m/s
Mechanical durability (in millions of operating cycles)		15	10	
Minimum force or torque	For tripping	15 N	12 N	0.1 N.m/*0.88 lb-in*
	For positive opening	45 N	36 N	0.25 N.m/*2.21 lb-in*
Cable entry		1 entry tapped M20 x 1.5 mm for ISO cable gland, clamping capacity 7 to 13 mm 1 entry tapped for Pg 13.5 cable gland, clamping capacity 9 to 12 mm 1 entry tapped for 1/2" NPT conduit		

Dimensions

XCSP3910●●●

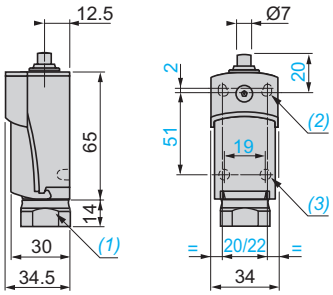

XCSP3902●●●

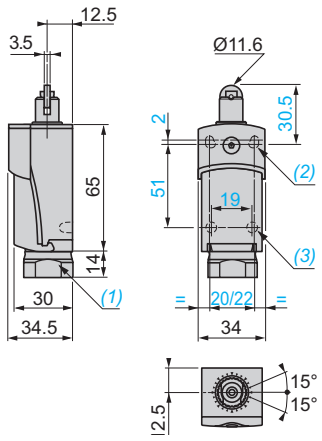

XCSP3918●●●, XCSP3919●●●

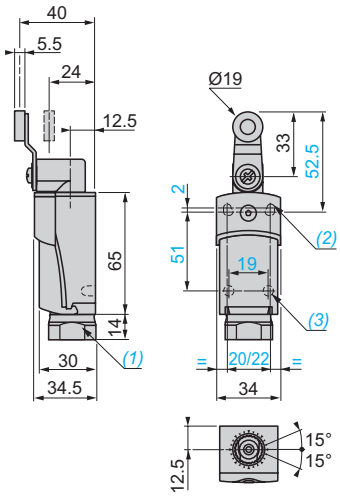

(1) Tapped entry for ISO M20 x 1.5 or Pg 13.5 cable gland or tapped 1/2" NPT.
(2) 2 elongated holes Ø 4.3 x 6.3 mm on 22 mm centers, 2 holes Ø 4.3 on 20 mm centers.
(3) 2 x Ø 3 holes for support studs, depth 4 mm.

Safety detection solutions

Lever or spindle-operated safety switches

XCSPL, XCSPR and XCSTR
plastic, double insulated, turret head

XCSPL with 1 cable entry

With rotary operating head, with elbowed lever (flush with rear of switch) or straight lever, for hinged covers and guards



Page 36

XCSPR with 1 cable entry

With rotary operating head, with spindle operator, for hinged covers and guards



Page 36

XCSTR with 2 cable entries

With rotary operating head, with spindle operator, for hinged covers and guards



Page 36

Environmental characteristics

Conformity to standards	Products	EN/IEC 60947-5-1, EN/IEC 60947-5-4, UL 508, CSA C22-2 no. 14
	Machine assemblies	EN/IEC 60204-1, EN/ISO 14119
Product certifications		UL, CSA, CCC, EAC
Maximum safety level *(1)*		PL=e, category 4 conforming to EN/ISO 13849-1 and SIL CL3 conforming to EN/IEC 62061
Reliability data B_{10D}		5,000,000 (value given for a service life of 20 years, limited by mechanical or contact wear)
Ambient air temperature	For operation	-25…+70 °C
	For storage	-40…+70 °C
Vibration resistance		50 gn (10…500 Hz) conforming to EN/IEC 60068-2-6
Shock resistance		50 gn (duration 11 ms) conforming to EN/IEC 60068-2-27
Electric shock protection		Class II conforming to EN/IEC 61140
Degree of protection		IP 67 conforming to EN/IEC 60529
Cable entry		**XCSPL and XSPR**: 1 entry tapped M16 x 1.5 for: ■ ISO cable gland (clamping capacity 4.5 to 10 mm) or ■ Pg 11 cable gland (clamping capacity 7 to 10 mm) or ■ 1/2" NPT conduit. **XSTR**: 2 entries tapped M16 x 1.5 for: ■ ISO cable gland (clamping capacity 4.5 to 10 mm) or ■ Pg 11 cable gland (clamping capacity 7 to 10 mm) or ■ 1/2" NPT conduit using the DE9 RA1012 adapter in one of the Pg 11 tapped entries and a blanking plug in the other.
Materials		Polyamide PA66 fibreglass impregnated case. Stainless steel lever and fixings

(1) Using an appropriate and correctly connected safety control unit.

Safety detection solutions

Lever or spindle-operated safety switches
XCSPL, XCSPR and XCSTR
plastic, double insulated, turret head

Contact block characteristics

Rated operational characteristics	2 and 3-contact versions	**XCSP (2-contact version), XCST (3 contacts)**: ~ AC-15, A300: Ue = 240 V, Ie = 3 A or Ue = 120 V, Ie = 6 A ⎓ DC-13, Q300: Ue = 250 V, Ie = 0.27 A or Ue = 125 V, Ie = 0.55 A conforming to EN/IEC 60947-5-1
	3-contact version	**XCSP (3-contact version)**: ~ AC-15, B300: Ue = 240 V, Ie = 1.5 A or Ue = 120 V, Ie = 3 A ⎓ DC-13, R300: Ue = 250 V, Ie = 0.1 A or Ue = 125 V, Ie = 0.2 A conforming to EN/IEC 60947-5-1
Conventional thermal current in enclosure	2 and 3-contact versions	**XCSP (2-contact version), XCST (3 contacts)**: Ithe = 10 A
	3-contact version	**XCSP (3-contact version)**: Ithe = 6 A
Rated insulation voltage	2 and 3-contact versions	**XCSP (2-contact version), XCST (3 contacts)**: Ui = 500 V degree of pollution 3 conforming to EN/IEC 60947-1 Ui = 300 V conforming to UL 508, CSA C22-2 no. 14
	3-contact version	**XCSP (3-contact version)**: Ui = 400 V degree of pollution 3 conforming to EN/IEC 60947-1 Ui = 300 V conforming to UL 508, CSA C22-2 no. 14
Rated impulse withstand voltage	2 and 3-contact versions	**XCSP (2-contact version), XCST (3 contacts)**: Uimp = 6 kV conforming to EN/IEC 60947-5-1
	3-contact version	**XCSP (3-contact version)**: Uimp = 4 kV conforming to EN/IEC 60947-5-4
Positive operation		NC contacts with positive opening operation conforming to EN/IEC 60947-5-1 Appendix K
Resistance across terminals		≤ 30 mΩ conforming to EN/IEC 60947-5-4
Short-circuit protection	2 and 3-contact versions	**XCSP (2-contact version), XCST (3 contacts)**: 10 A cartridge fuse type gG (gl)
	3-contact version	**XCSP (3-contact version)**: 6 A cartridge fuse type gG (gl)
Connection	2 and 3-contact versions	**XCSP (2-contact version), XCST (3 contacts)**: Clamping capacity, min: 1 x 0.5 mm^2, max: 2 x 1.5 mm^2 with or without cable end
	3-contact version	**XCSP (3-contact version)**: Clamping capacity, min: 1 x 0.34 mm^2, max: 1 x 1 mm^2 or 2 x 0.75 mm^2
Minimum actuation speed	2 and 3-contact versions	0.1 m/second

Complementary characteristics

Tripping angle		5°
Mechanical durability		1 million operating cycles
Minimum torque	For tripping	0.1 N.m/*0.88 lb-in*
	For positive opening	0.25 N.m/*2.21 lb-in* (XCSPL and XCSPR) 0.45 N.m/*3.98 lb-in* (XCSTR)

Electrical durability

- Conforming to EN/IEC 60947-5-1 Appendix C
- Utilization categories AC-15 and DC-13
- Load factor: 0.5
- Maximum operating rate: 3600 operating cycles/hour

AC supply
50/60 Hz ~
⎓ inductive circuit

XCSPL, XCSPR: 2-contact version
XCSTR: 3 contacts

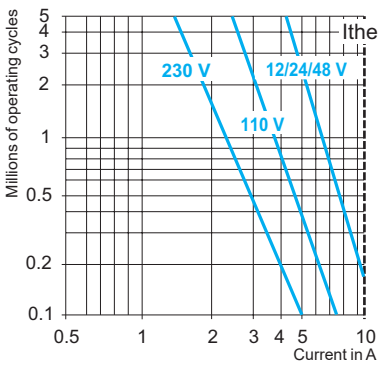

XCSPL, XCSPR: 3-contact version

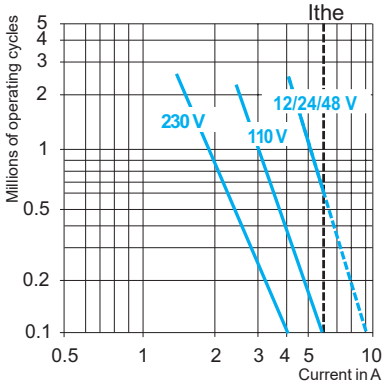

DC supply ⎓
Power broken in W for 1 million operating cycles

Voltage	**V**	**24**	**48**	**120**
⎓	W	13	9	7

Voltage	**V**	**24**	**48**	**120**
⎓	W	4	3	2

Safety detection solutions

Lever or spindle-operated safety switches
XCSPL, XCSPR and XCSTR
plastic, double insulated, turret head *(1)*
1 or 2 cable entries

Type of switch	Elbowed lever (flush with rear of switch)			Straight lever		Spindle	
							
Operator	To left	Centered	To right	To right OR to left	Centered	Length 30 mm *(2)*	
References of complete switches (⊖ NC contact with positive opening operation) with 1 cable entry tapped ISO M16 x 1.5							
2-pole **1 NC + 1 NO** break before make, slow break 	**XCSPL592** ⊖	**XCSPL582** ⊖	**XCSPL572** ⊖	**XCSPL562** ⊖	**XCSPL552** ⊖	**XCSPR552** ⊖	–
2-pole **2 NC** slow break 	**XCSPL792** ⊖	**XCSPL782** ⊖	**XCSPL772** ⊖	**XCSPL762** ⊖	**XCSPL752** ⊖	**XCSPR752** ⊖	–
3-pole **1 NC + 2 NO** break before make, slow break 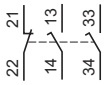	–	–	–	**XCSPL862** ⊖	–	–	**XCSTR552** ⊖
3-pole **2 NC + 1NO** break before make, slow break 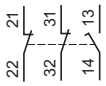	–	–	–	**XCSPL962** ⊖	–	**XCSPR952** ⊖	**XCSTR752** ⊖
3-pole **3 NC** slow break 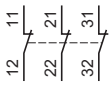	–	–	–	–	–	–	**XCSTR852** ⊖
Weight (kg)	0.095	0.095	0.095	0.095	0.095	0.105	0.155

References of complete switches with 1 or 2 cable entries tapped no. 11 (Pg 11)

To order a complete switch with 1 or 2 Pg 11 cable entries, replace the last number in the reference **(2)** with **1.**
Example: XCSPL752 becomes **XCSPL751** (some Pg 11 references may not be available).

References of complete switches with 1 or 2 cable entries for 1/2" NPT conduit

To order a complete **XCSPL●●●** or **XCSPR ●●●** switch with 1 cable entry for 1/2" NPT conduit, replace the last number in the reference **(2)** with **3.**
Example: XCSPL592 becomes **XCSPL593** (some 1/2" NPT references may not be available).
For a complete **XCSTR** switch with 2 entries for 1/2" NPT conduit, use DE9RA1012 adapter.


DE9RA1012

Description	Sold in lots of 10	Unit reference	Weight kg
1/2" NPT conduit adapter	10	**DE9RA1012**	0.050

(1) Head adjustable in 90° steps through 360°. Switches supplied with 2 additional self-locking screws for positive fixing of the head.
*(2) For switches with 80 mm spindle: replace the second number in the reference **(5)** with **6**. Example: XCSPR552 becomes **XCSPR562**. The weight increases by 0.032 kg (some 80 mm spindle references may not be available).*

Other versions: please consult our Customer Care Center.

Safety detection solutions

Lever or spindle-operated safety switches
XCSPL, XCSPR and XCSTR
plastic, double insulated, turret head
1 or 2 cable entries

Setting-up

Operator displacement

XCSPL●9●, PL●7●, PL●6●



XCSPL●8●, PL●5●



XCSPR●5●



XCSTR●5●



Functional diagrams

XCSPL59●, PL57●, PL56●

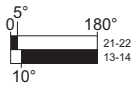

XCSPL58●, PL55●

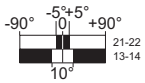

XCSPR55●

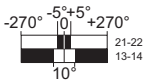

XCSPR95●

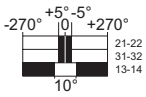

XCSTR55●

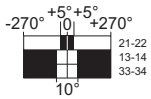

XCSPL79●, PL77●, PL76●

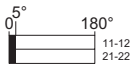

XCSPL78●, PL75●

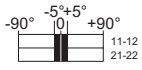

XCSPR75●

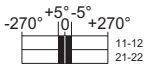

XCSTR75●

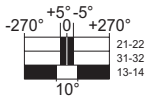

Contact operation

■ closed
□ open

XCSPL98●

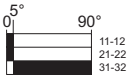

XCSPR85●

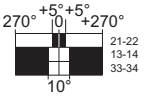

XCSTR85●

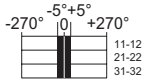

Dimensions

XCSPL●●●

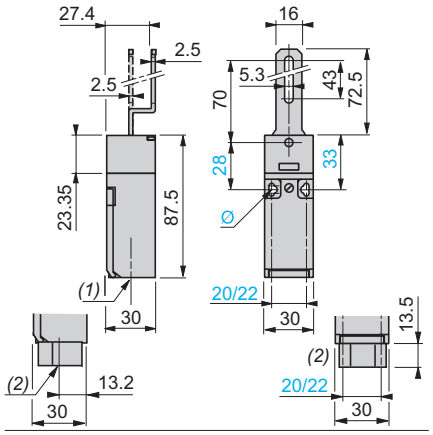

(1) 1 entry tapped ISO M16 x 1.5 or tapped for Pg 11 cable gland
(2) 1 entry tapped for 1/2" NPT conduit
Ø: 2 elongated holes Ø 4.3 x 8.3 on 22 centers, 2 holes Ø 4.3 on 20 centers

XCSPR●●●

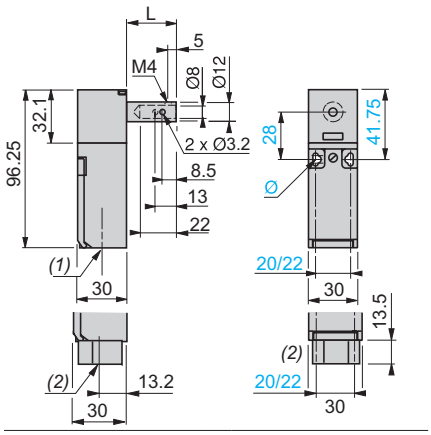

(1) 1 entry tapped for Pg 11 cable gland
(2) 1 entry tapped for 1/2" NPT conduit
Ø: 2 elongated holes Ø 4.3 x 8.3 on 22 centers, 2 holes Ø 4.3 on 20 centers
L = 30 (XCSPR●5●) or 80 (XCSPR●6●)

XCSTR●●●

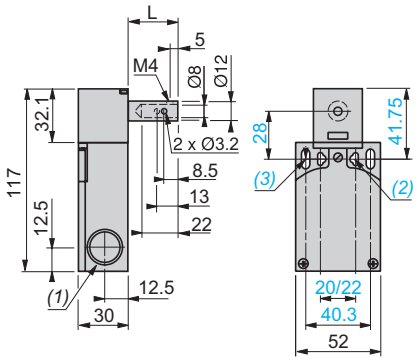

(1) 2 entries tapped ISO M16 x 1.5 or tapped for Pg 11 cable gland
(2) 2 elongated holes Ø 4.3 x 8.3 on 22 centers, 2 holes Ø 4.3 on 20 centers
(3) 2 elongated holes Ø 5.3 x 13.3
L = 30 (XCSTR●5●) or 80 (XCSTR●6●)

Schemes

Wiring up to PL=b, category 1 conforming to EN/ISO 13849-1

Example with cable short-circuit protection fuse

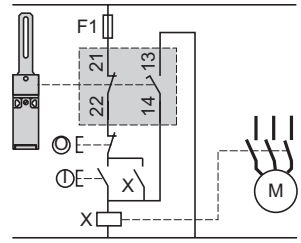

Wiring up to PL=d, category 3 conforming to EN/ISO 13849-1

Example with 3-pole 1 NC + 2 NO contact with mixed redundancy of the contacts and the associated control relays

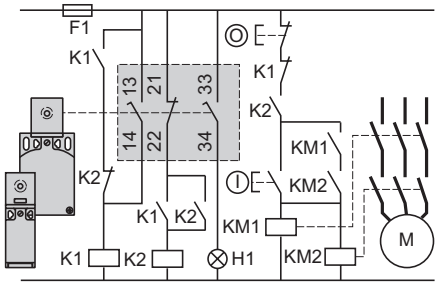

To activate K1, the lever or spindle needs to be rotated when the supply is switched on.

H1: "lever or spindle displaced from initial position" indicator. When used in conjunction with an an appropriate safety control unit and another safety switch, the rotary lever or spindle-operated switch can provide locking protection to PL=d, category 3 or PL=e, category 4 conforming to EN/ISO 13849-1.

Safety detection solutions

Key-operated safety switches

XCSA, XCSB and XCSC metal, turret head
XCSMP, XCSPA and XCSTA
plastic, double insulated, turret head

XCSA, XCSB, XCSC metal

Key-operated switches with or without locking of the actuating key


XCSA


XCSB


XCSC

Page 48

XCSMP, XCSPA, XCSTA plastic

Key-operated switches without locking of the actuating key


XCSMP


XCSPA


XCSTA

Page 40

Environmental characteristics

Key-operated switch type		XCSA, XCSB, XCSC (metal)	XCSMP, XCSPA, XCSTA (plastic)
Conformity to standards	Products	EN/IEC 60947-5-1, UL 508, CSA C22-2 no. 14	
	Machine assemblies	EN/IEC 60204-1, EN/ISO 14119	
Product certifications		UL, CSA, CCC, EAC	UL, CSA, CCC, EAC (cULus, EAC for **XCSMP**)
Maximum safety level *(1)*		PL=e, category 4 conforming to EN/ISO 13849-1 and SIL CL3 conforming to EN/IEC 62061	
Reliability data B_{10D}		XCSA/PA/TA/MP: 5,000,000 XCSB/C: 3,000,000 (value given for a service life of 20 years, limited by mechanical or contact wear)	
Ambient air temperature	For operation	-25…+70 °C	
	For storage	-40…+70 °C (-25…+80 °C for **XCSMP**)	
Vibration resistance		5 gn (10…500 Hz) conforming to EN/IEC 60068-2-6 (6 gn (10…55 Hz) for **XCSMP**)	
Shock resistance		10 gn (duration 11 ms) conforming to EN/IEC 60068-2-27 (50 gn (duration 11 ms) for **XCSMP**)	
Electric shock protection		Class I conforming to EN/IEC 61140	Class II conforming to EN/IEC 61140
Degree of protection		**IP 67 conforming to EN/IEC 60529 and EN/IEC 60947-5-1** *(2)*	
Cable entry		1 entry tapped ISO M20 x 1.5 (clamping capacity 7 to 13 mm) or tapped for Pg 13.5 cable gland (clamping capacity 9 to 12 mm) or for 1/2" NPT conduit	1 entry (**XCSPA**) or 2 entries (**XCSTA**) tapped for ISO M16 x 1.5 cable gland (clamping capacity 4.5 to 10 mm) or for Pg 11 cable gland, or tapped 1/2" NPT, or for 1/2" NPT conduit using metal adapter DE9RA1012) for **XCSTA** (other entry fitted with blanking plug).
Connecting cable		–	Pre-cabled, either 4 x 0.5 mm^2 or 6 x 0.5 mm^2 (**XCSMP**)
Materials		Zamak case	Polyamide PA66 fibreglass impregnated case
		Actuating keys (all types): steel XC60, surface treated	

(1) Using an appropriate and correctly connected safety control unit

(2) Live parts of these switches are protected to some extent against the penetration of dust and water. However, when installing take all necessary precautions to help prevent the penetration of solid bodies, or liquids with a high dust content, into the actuating key aperture. Use of blanking plugs in unused key slots can reduce the penetration of unwanted elements (XCSZ28 for XCSMP and XCSZ27 for XCSA, XCSB, XCSC). One blanking plug is delivered with the product. Not recommended for use in saline atmospheres.

Safety detection solutions
Key-operated safety switches
XCSA, XCSB and XCSC metal, turret head
XCSMP, XCSPA and XCSTA
plastic, double insulated, turret head

Contact block characteristics

Rated operational characteristics		2 and 3 contacts, slow break	**XCSA, XCSB, XCSC, XCSTA, XCSPA**: ∼ AC-15, A300: Ue = 240 V, Ie = 3 A or Ue = 120 V, Ie = 6 A **XCSMP**: ∼ AC-15, C300: Ue = 240 V, Ie = 0.75 A or Ue = 120 V, Ie = 1.5 A All models: ⎓ DC-13, Q300: Ue = 250 V, Ie = 0.27 A or Ue = 125 V, Ie = 0.55 A conforming to EN/IEC 60947-5-1
		2 contacts, snap action	**XCSPA**: ∼ AC-15, A300: Ue = 240 V, Ie = 3 A ⎓ DC-13, Q300: Ue = 250 V, Ie = 0.27 A or Ue = 125 V, Ie = 0.55 A conforming to EN/IEC 60947-5-1
		3 contacts, snap action	**XCSPA**: ∼ AC-15, B300: Ue = 240 V, Ie = 1.5 A ⎓ DC-13, R300: Ue = 250 V, Ie = 0.1 A or Ue = 125 V, Ie = 0.55 A conforming to EN/IEC 60947-5-1
Conventional thermal current in enclosure			**XCSA, XCSB, XCSC, XCSTA** (3 slow break contacts): Ithe = 10 A **XCSPA** (2 slow break and snap action contacts): Ithe = 10 A **XCSPA** (3 slow break and snap action contacts): Ithe = 6A **XCSMP** (2 and 3 slow break contacts): Ithe = 2.5 A
Rated insulation voltage		2 and 3 contacts	3 contacts (**XCSA, XCSB, XCSC, XCSTA**), 2 contacts (**XCSPA**), 2 and 3 contacts (**XCSMP**): Ui = 500 V conforming to EN/IEC 60947-1; Ui = 300 V conforming to UL 508, CSA C22-2 no. 14
		3 contacts	**XCSPA**: Ui = 400 V degree of pollution 3 conforming to EN/IEC 60947-1 Ui = 300 V conforming to UL 508, CSA C22-2 no. 14
Rated impulse withstand voltage		2 and 3 contacts	3 contacts (**XCSA, XCSB, XCSC, XCSTA**), 2 contacts (**XCSPA**), 2 and 3 contacts (**XCSMP**): Uimp = 6 kV conforming to EN/IEC 60947-5-1
		3 contacts	**XCSPA**: Uimp = 4 kV conforming to EN/IEC 60947-5-4
Positive operation			NC contacts with positive opening operation conforming to EN/IEC 60947-5-1, Section 3
Resistance across terminals			≤ 30 mΩ conforming to EN/IEC 60947-5-4
Short-circuit protection		2 and 3 contacts	3 contacts (**XCSA, XCSB, XCSC, XCSTA**), 2 contacts (**XCSPA**), 2 and 3 contacts (**XCSMP**): 10 A cartridge fuse type gG (gl)
		3 contacts	**XCSPA**: 6 A cartridge fuse type gG (gl)
Connection	Pre-cabled		4 x 0.5 mm² or 6 x 0.5 mm² (**XCSMP**). PVC
	Screw clamp terminals	2 contacts, snap action	**XCSPA**, **XCSTA**: Clamping capacity, min: 1 x 0.34 mm², max: 2 x 1.5 mm²
		2 and 3 contacts	**3 contacts (XCSA, XCSB, XCSC, XCSTA)**, 2 contacts **(XCSPA)**: Clamping capacity, min: 1 x 0.5 mm², max: 2 x 1.5 mm² with or without cable end
		3 contacts	**XCSPA**: clamping capacity, min: 1 x 0.34 mm², max: 1 x 1 mm² or 2 x 0.75 mm²

Electrical durability

- Conforming to EN/IEC 60947-5-1 Appendix C
- Utilization categories AC-15 and DC-13
- Maximum operating rate: 3600 operating cycles/hour
- Load factor: 0.5

Only applicable to **XCSMP**:
- Conforming to EN/IEC 60947-5-1 Appendix C
- Utilization categories AC-15 and DC-13
- Maximum operating rate: 900 operating cycles/hour

AC supply
50/60 Hz ∼
inductive circuit

XCSPA 2 snap action contact version

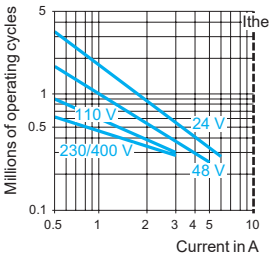

XCSA, XCSB, XCSC, XCSTA 3 slow break contact version and XCSPA 2 slow break contact version

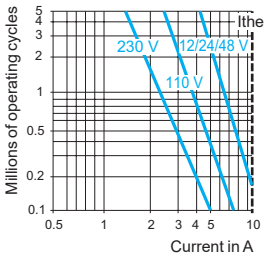

DC supply ⎓
Power broken in W for 1 million operating cycles

Voltage	V	24	48	120
⎓	W	10	7	4

Voltage	V	24	48	120
⎓	W	13	9	7

For **XE2SP●151** on ∼ or ⎓, NC and NO contacts simultaneously loaded to the values shown with reverse polarity.

AC supply
50/60 Hz ∼
inductive circuit

XCSPA 3 snap action contact version

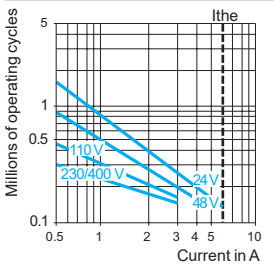

XCSPA 3 slow break contact version

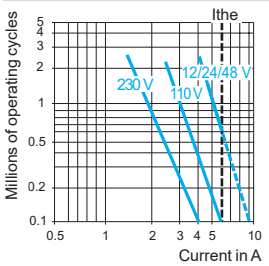

DC supply ⎓
Power broken in W for 5 million operating cycles.

Voltage	V	24	48	120
⎓	W	3	2	1

Voltage	V	24	48	120
⎓	W	4	3	2

Safety detection solutions

Key-operated safety switches

XCSMP plastic, fixed head

Pre-cabled, length 2 m, 5 m or 10 m

Type of switch	Without locking of actuating key



XCSMP switch

References of switches without actuating key *(4)* (⊖ NC contact with positive opening operation) *(1) (3)*

2-pole 1 NC + 1 NO **break before make, slow break** *(2)*	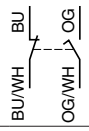	**XCSMP59L●** ⊖
2-pole 2 NC **slow break** *(2)*	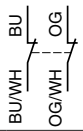	**XCSMP79L●** ⊖
3-pole 2 NC + 1 NO **break before make, slow break** *(2)*	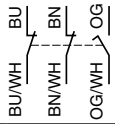	**XCSMP70L●** ⊖
3-pole 3 NC **slow break** *(2)*	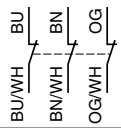	**XCSMP80L●** ⊖
Weight (kg)		0.110

Complementary characteristics not shown under general characteristics (page 38)

Actuation speed	Maximum: 1.5 m/s, minimum: 0.05 m/s
Mechanical durability	**> 1 million operating cycles**
Pre-cabled connection	4 x 0.5 mm^2 or 6 x 0.5 mm^2
Maximum operating rate	For maximum durability: 1 200 operating cycles per hour
Minimum force for extraction of actuating key	≥ 8 N

References of actuating keys

Description	Straight actuating key	Right-angled actuating key	Pivoting actuating key	
			For right-hand door	For left-hand door
	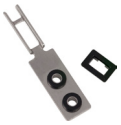			
For XCSMP safety switches	**XCSZ81**	**XCSZ84**	**XCSZ83**	**XCSZ85**
Weight (kg)	0.015	0.025	0.085	0.085

Separate components

Description	Unit reference	Weight (kg)
Blanking plugs for operating head slot (Sold in lots of 10)	**XCSZ29**	0.005

(1) Blanking plug for operating head slot included with switch.

(2) Schematic diagrams shown represent the contact states while the actuating key is inserted in the head of the switch.

*(3) Basic reference, to be completed: replace the dot with **2** for a 2 m long cable, with **5** for a 5 m long cable or with **10** for a 10 m long cable. Some lengths may not be available. Example: **XCSMP70L●** becomes **XCSMP70L10** for a switch with a 10 m long cable.*

(4) Actuating keys to be ordered separately (see above).

Dimensions: page 41 | Setting-up: page 42 | Schemes: page 43

Safety detection solutions
Key-operated safety switches
XCSMP plastic, fixed head
Pre-cabled, length 2 m, 5 m or 10 m

Dimensions

XCSMP

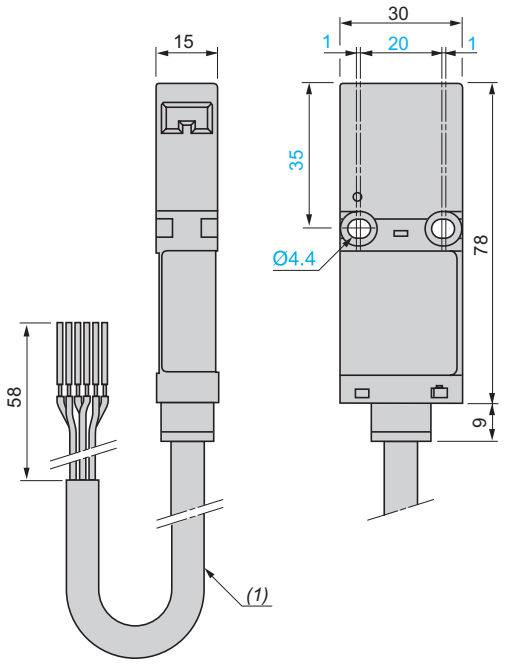

(1) Ø 7.6, length 2, 5 or 10 m.

XCSZ81

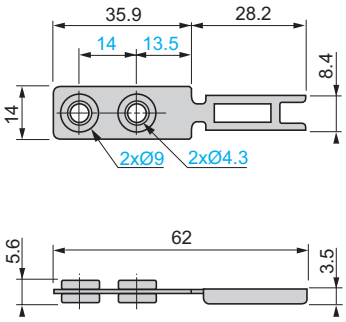

XCSZ84

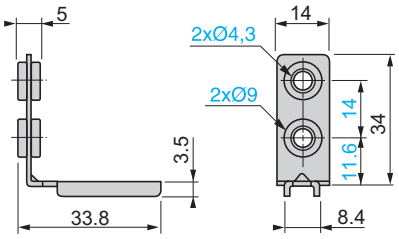

XCSZ83

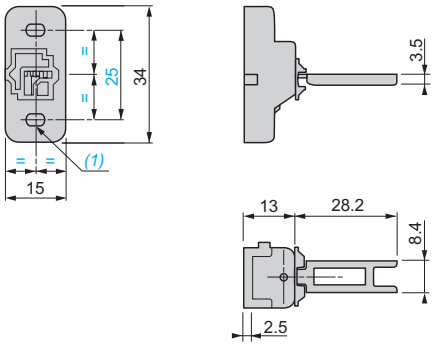

(1) 2 elongated holes Ø 4.2 x 6.

XCSZ85

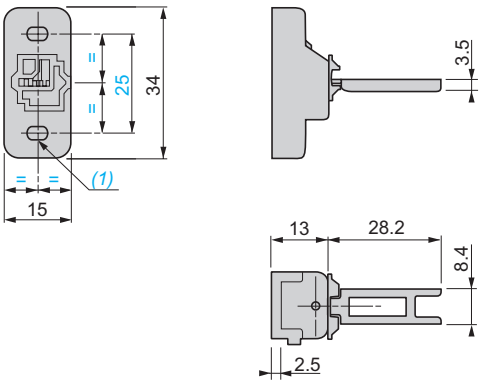

(1) 2 elongated holes Ø 4.2 x 6.

Safety detection solutions

Key-operated safety switches

XCSMP plastic, fixed head

Pre-cabled, length 2 m, 5 m or 10 m

Operating radius required for actuating key

XCSZ81

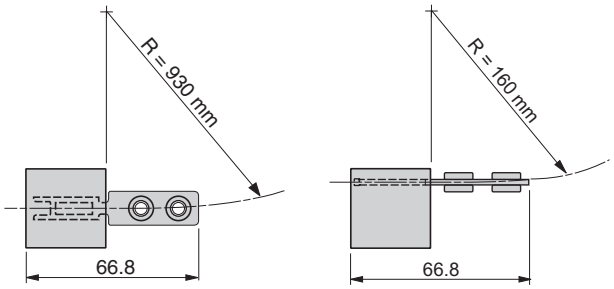

XCSZ84

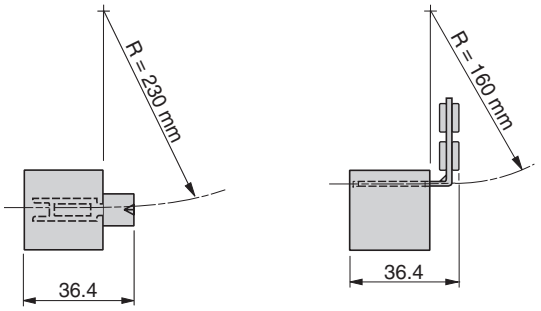

XCSZ83

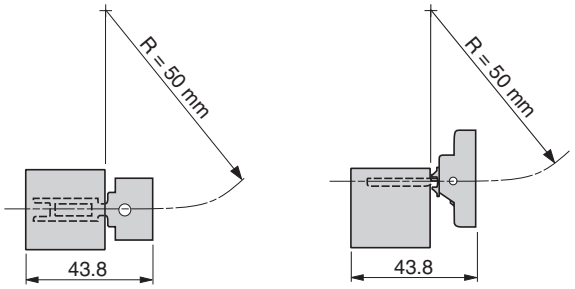

XCSZ85

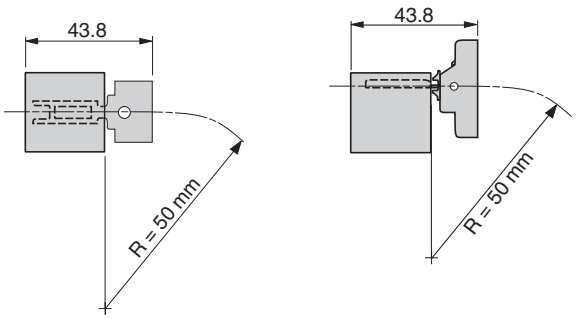

Functional diagrams

XCSMP59●

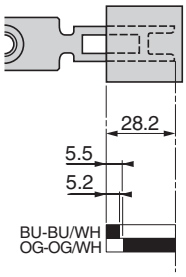

XCSMP79●

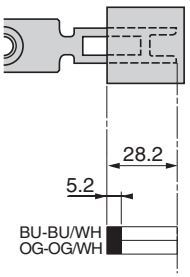

XCSMP70●

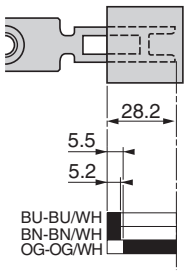

XCSMP80●

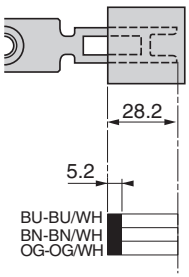

Contact operation

closed

open

References: page 40 | Characteristics: page 40 | Dimensions: page 41 | Schemes: page 43

Safety detection solutions
Key-operated safety switches
XCSMP plastic, fixed head
Pre-cabled, length 2 m, 5 m or 10 m

Schemes Note: These schemes are given as examples only, the designer should refer to the relevant safety standards for guidance.

Wiring up to PL=b, category 1 conforming to EN/SO 13849-1

Example with 3-pole 2 NC + 1 NO contact and protection fuse to help prevent shunting of the NC contact, due to either cable damage or tampering.

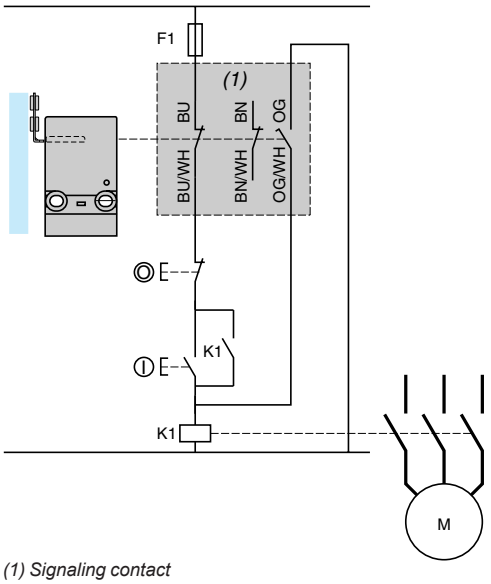

Wiring up to PL=d, category 3 conforming to EN/ISO 13849-1

Example with 2-pole 1 NC + 1 NO contact with mixed redundancy of the contacts and the associated control relays.
To activate K1, it is necessary to remove and re-insert the actuating key when the supply is switched on.

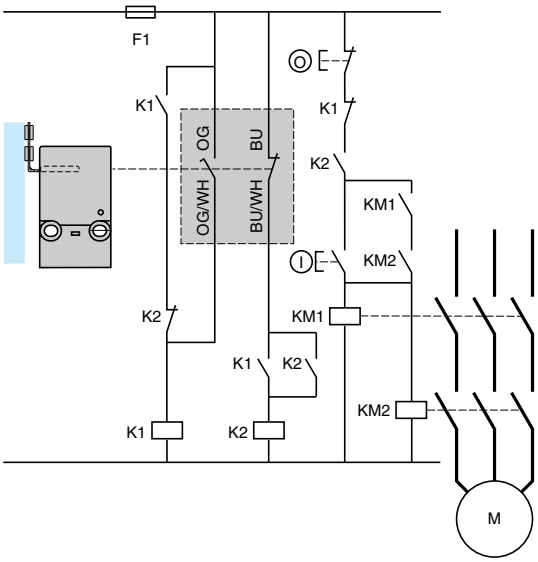

(1) Signaling contact

Wiring to PL=e, category 4 conforming to EN/ISO 13849-1 and SIL CL3 conforming to EN/IEC 62061. Wiring method used in conjunction with a safety control unit.

(The guard switch should be used in conjunction with a safety limit switch to give electrical/mechanical redundancy).

Method for machines with quick rundown time (low inertia)
Locking or interlocking device based on the principle of redundancy and self-monitoring.
The safety control units provide these functions.

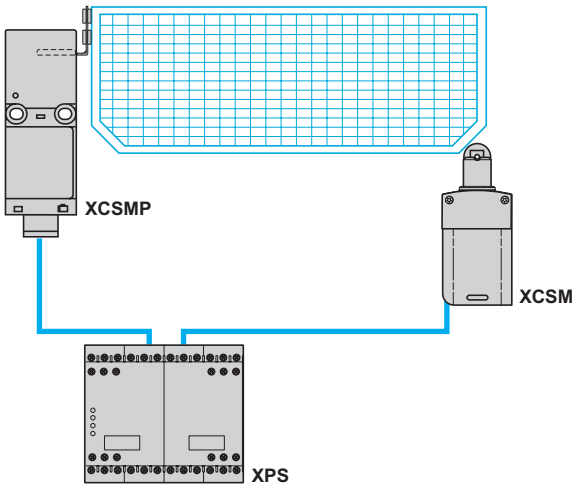

Locking of actuating key and operation in positive mode associated with a safety control unit.

Safety detection solutions
Key-operated safety switches
XCSPA and XCSTA plastic, turret head
1 or 2 cable entries

Type of switch		Without locking of actuating key			
		 XCSPA		 XCSTA	
References of switches without actuating key *(4)* (⊖ NC contact with positive opening operation) with 1 or 2 cable entries tapped ISO M16 x 1.5					
2-pole 1 NC + 1 NO *(2)* break before make, slow break		**XCSPA592**	⊖	–	
2-pole 1 NC + 1 NO *(2)* snap action		**XCSPA192**	⊖		
2-pole 1 NO + 1 NC *(2)* make before break, slow break		**XCSPA692**	⊖	–	
2-pole 2 NC *(2)* slow break		**XCSPA792**	⊖	–	
2-pole 2 NC *(2)* snap action		**XCSPA292**	⊖		
3-pole 1 NC + 2 NO *(2)* break before make, slow break		**XCSPA892**	⊖	**XCSTA592**	⊖
3-pole 2 NC + 1 NO *(2)* break before make, slow break		**XCSPA992**	⊖	**XCSTA792**	⊖
3-pole 2 NC + 1 NO *(2)* snap action		**XCSPA492**	⊖	**–**	
3-pole 3 NC *(2)* slow break		–		**XCSTA892**	⊖
Weight (kg)		0.110		0.160	

References of switches without actuating key *(4)* (⊖ NC contact with positive opening operation) with 1 or 2 cable entries tapped Pg 11 or 1/2" NPT

To order a switch with 1 or 2 cable entries for Pg 11 cable gland (clamping capacity 7 to 10 mm), replace the last number **(2)** with **1** in the selected reference. Example: XCSPA592 becomes **XCSPA591** (some Pg 11 references may not be available).
To order a switch with 1 or 2 cable entries for 1/2" NPT conduit (one Pg 11 tapped entry fitted with DE9RA1012 metal adapter), replace the last number **(2)** with **3** in the selected reference. Example: XCSTA592 becomes **XCSTA593** (some 1/2" NPT references may not be available).

Complementary characteristics not shown under general characteristics (page 38)

Actuation speed	Maximum: 0.5 m/s, minimum: 0.01 m/s
Resistance to forcible withdrawal of actuating key	**XCSPA, XCSTA:** 10 N (50 N using actuating keys **XCSZ12** or **XCSZ13** together with guard retaining device **XCSZ21**)
Mechanical durability	**XCSPA, XCSTA: > 1 million operating cycles**
Maximum operating rate	For maximum durability: 600 operating cycles per hour
Minimum force for positive opening	≥ 15 N
Cable entry	**XCSPA:** 1 entry tapped M16 x 1.5 for ISO cable gland. **XCSTA:** 2 entries tapped M16 x 1.5 for ISO cable gland.
Materials	Body and head: polyamide PA66, fibreglass impregnated

References of accessories


XCSZ91


XCSZ200

Description	For use with	Unit reference	Weight (kg)
Blanking plugs for operating head slot (Sold in lots of 10)	XCSPA, XCSTA	**XCSZ28**	0.050
Padlocking device to help prevent insertion of actuating key, for up to 3 padlocks (padlocks not included)	XCSPA, XCSTA	**XCSZ91**	0.053
Actuating key centering device *(3)* (Fixing screws included)	XCSPA, XCSTA	**XCSZ200**	0.022

(1) Head adjustable in 90° steps through 360°. Blanking plug for operating head slot included with switch.
(2) Schematic diagrams shown represent the contact states while the actuating key is inserted in the head of the switch.
(3) Not for use with XCSZ91.
(4) Actuating keys to be ordered separately (see page 45).

Other versions: please consult our Customer Care Center.

Safety detection solutions
Key-operated safety switches
XCSPA and XCSTA plastic, turret head *(1)*
1 or 2 cable entries

References of actuating keys and guard retaining device



Description	Straight actuating key	Actuating key with wide fixing *(1)*		Pivoting actuating key	Right-angled actuating key	Guard retaining device *(2)*
For XCSPA and XCSTA key-operated safety switches	**XCSZ11**	**XCSZ12**	**XCSZ15**	**XCSZ13**	**XCSZ14**	**XCSZ21**
Weight (kg)	0.015	0.015	0.012	0.085	0.025	0.080

(1) 2 actuating key lengths, XCSZ12: L = 40 mm, XCSZ15: L = 29 mm.
(2) Only for use with XCSPA and XCSTA key-operated switches (without XCSZ200 actuating key centering device) used in conjunction with XCSZ12, XCSZ13 or XCSZ15 actuating keys.

Dimensions

XCSPA●91, XCSPA●92

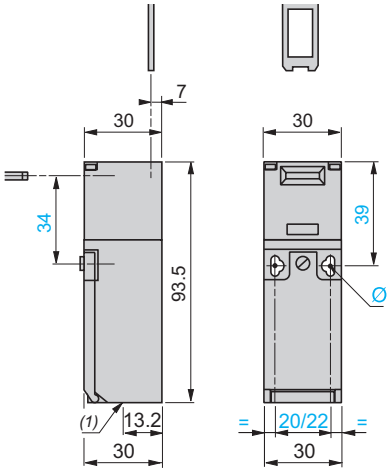

(1) 1 tapped entry for cable gland
Ø: 2 elongated holes Ø 4.3 x 8.3 on 22 centers, 2 holes Ø 4.3 on 20 centers

XCSPA●93

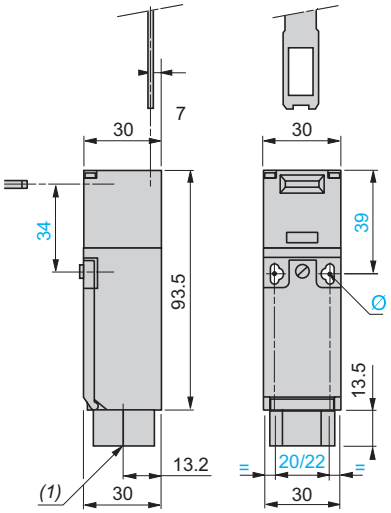

(1) 1 tapped entry for 1/2" NPT conduit
Ø: 2 elongated holes Ø 4.3 x 8.3 on 22 centers, 2 holes Ø 4.3 on 20 centers

XCSTA●9●

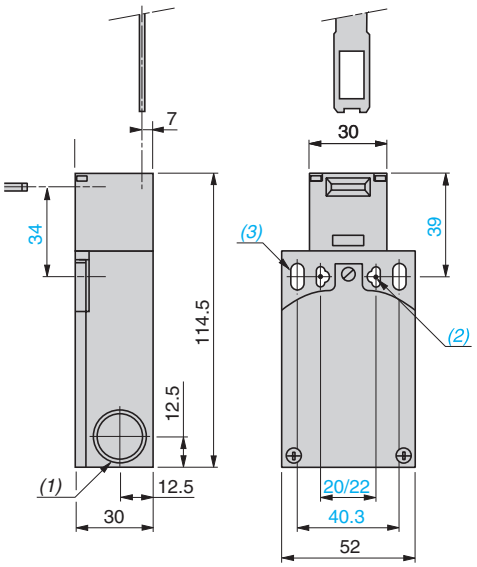

(1) 2 tapped entries for cable gland or 1/2" NPT conduit adapter
(2) 2 elongated holes Ø 4.3 x 8.3 on 22 centers, 2 holes Ø 4.3 on 20 centers
(3) 2 elongated holes Ø 5.3 x 13.3

XCSZ200 actuating key centering device

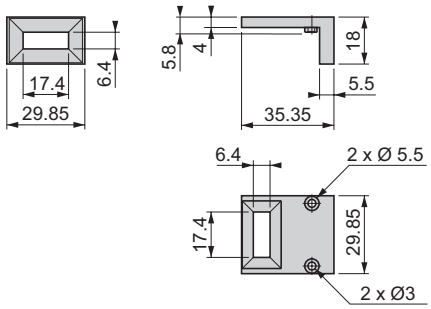

1/2" NPT conduit adapter
DE9RA1012

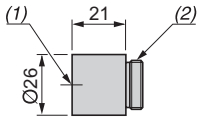

(1) Tapped entry for 1/2" NPT conduit
(2) Pg 11 threaded shank

M16 x 1.5 adapter
DE9RA1016

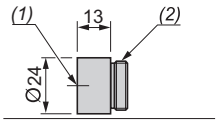

(1) M16 x 1.5 tapped entry
(2) Pg 11 threaded shank

References: page 44
Schemes: page 47

Dimensions (continued)

XCSZ11

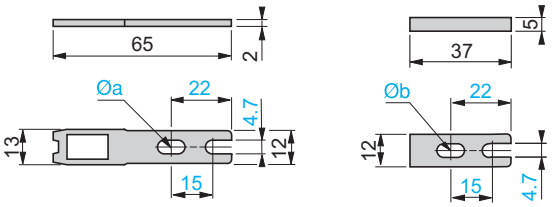

(1) Adapter (included with XCSZ11 actuating key) for replacing, without drilling an additional fixing hole, a legacy XCKP/T key-operated switch with XCKY01 actuating key by an XCSTA key-operated switch with XCSZ11 actuating key.

Ø a: 2 elongated holes Ø 4.7 x 10

Ø b: 1 elongated hole for M4 or M4.5 screw

XCSZ12, XCSZ15

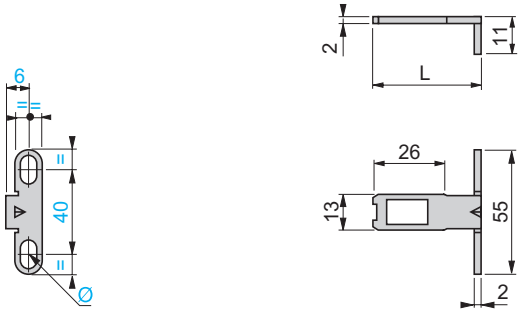

Ø: 2 elongated holes Ø 4.7 x 10

L = 40 mm (XCSZ12) or 29 mm (XCSZ15)

XCSZ13

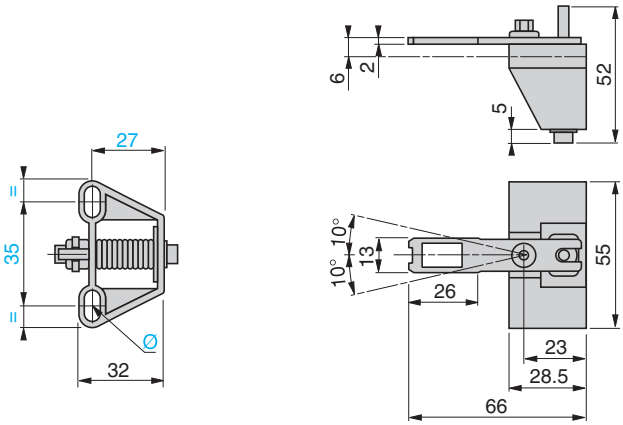

Ø: 2 elongated holes Ø 4.7 x 10

XCSZ14

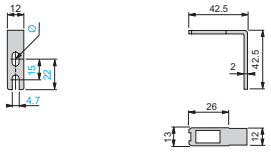

Ø: 1 elongated hole Ø 4.7 x 10

Operating radius required for actuating key

XCSZ11

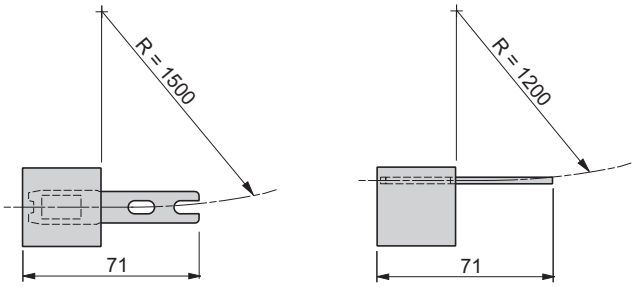

XCSZ12, XCSZ15

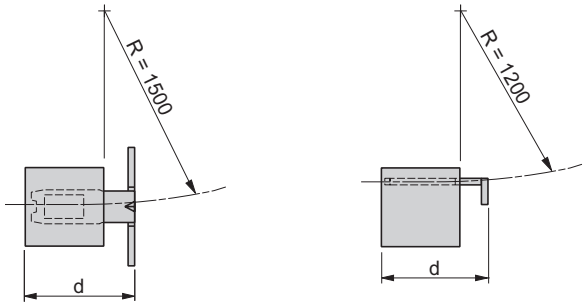

d = 46 mm (XCSZ12) or 35 mm (XCSZ15)

XCSZ13

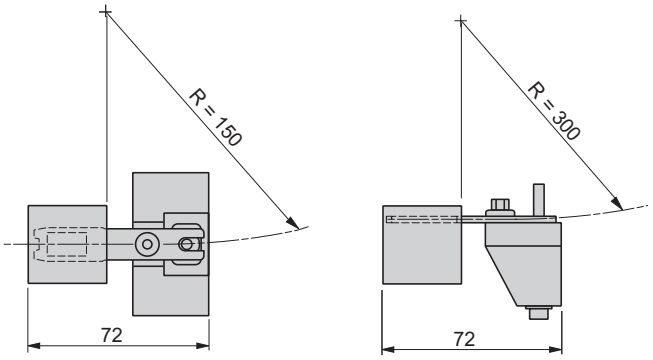

XCSZ14

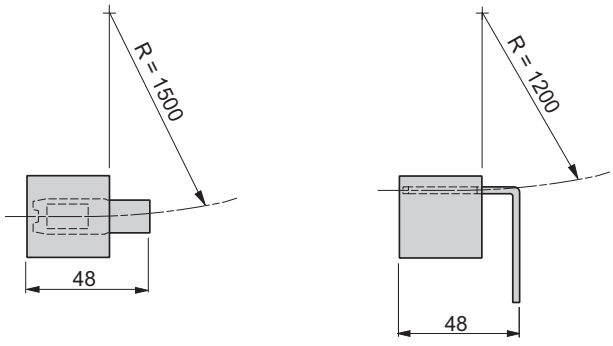

R = minimum radius

Safety detection solutions
Key-operated safety switches
XCSPA and XCSTA plastic, turret head
1 or 2 cable entries

Setting-up
Functional diagrams

XCSPA1●●

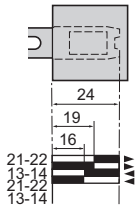

XCSPA2●●

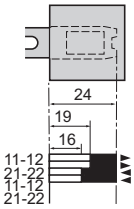

XCSPA3●●

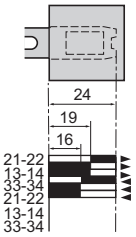

XCSPA4●●

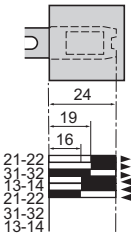

XCSPA5●●, XCSTE5●●●

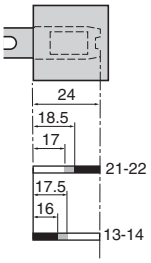

XCSPA6●●, XCSTE6●●●

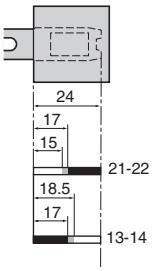

XCSPA7●●, XCSTE7●●●

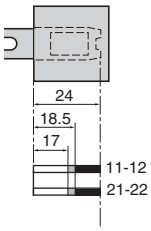

XCSTA5●●, XCSPA8●●

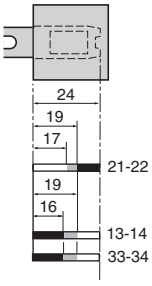

XCSTA7●●, XCSPA9●●

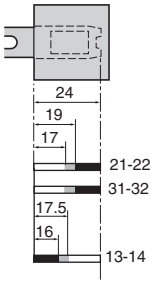

XCSTA8●●

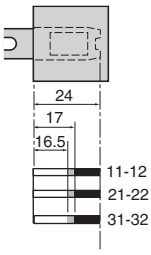

Contact operation

■ Closed □ Open ▭ Transient state

Schemes
Note: These schemes are given as examples only, the designer should refer to the relevant safety standards for guidance.

Wiring to PL=e, category 4 conforming to EN/ISO 13849-1 and SIL CL3 conforming to EN/IEC 62061 Wiring method used in conjunction with a safety control unit

(The key-operated switch should be used in conjunction with a safety limit switch to give electrical/mechanical redundancy)

Method for machines with quick rundown time (low inertia)

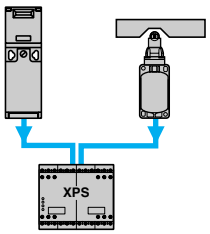

Locking of actuating key and operation in positive mode associated with a safety control unit.

Wiring to PL=b, category 1 conforming to EN/ISO 13849-1

Example with 3-pole 1 NC + 2 NO contact and protection fuse to help prevent shunting of the NC contact, due to either cable damage or tampering.

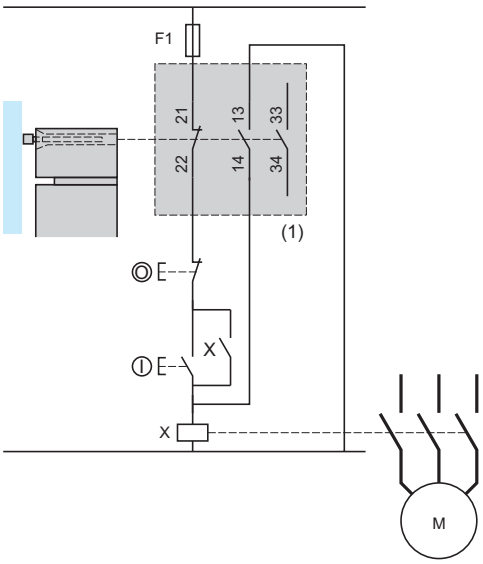

(1) Signaling contact.

Wiring to PL=d, category 3 conforming to EN/ISO 13849-1

Example with 2-pole 1 NC + 1 NO contact with mixed redundancy of the contacts and the associated control relays. To activate K1, it is necessary to remove and re-insert the actuating key when the supply is switched on.

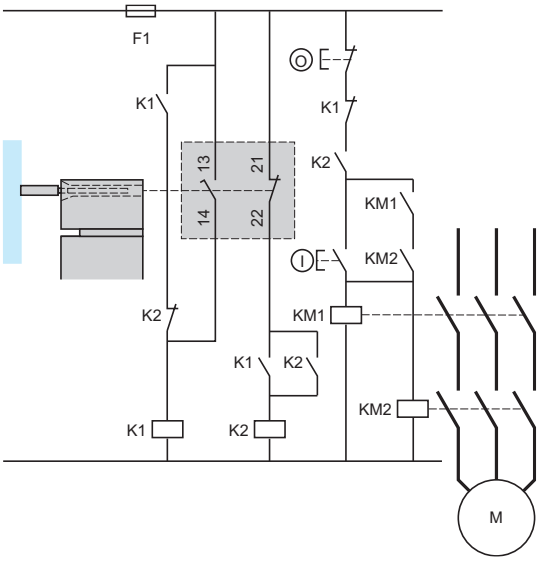

Safety detection solutions

Key-operated switches

XCSA, XCSB and XCSC metal, turret head *(1)*
1 cable entry

Type of switch	Without locking of actuating key			With locking of actuating key, manual unlocking *(2)*	
	 *XCSA*			 *XCSB*	 *XCSC*
LED indication on opening of NC contacts	No	1 orange LED 24/48 V ⎓	1 orange LED 110/240 V ∿	No *(4)*	No *(4)*

References of switches without actuating key *(5)* (⊖ NC contact with positive opening operation) with 1 cable entry tapped ISO M20 x 1.5

3-pole **1 NC + 2 NO** break before make, slow break *(3)*	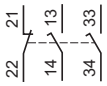	**XCSA502** ⊖	**XCSA512** ⊖	**XCSA522** ⊖	**XCSB502** ⊖	**XCSC502** ⊖
3-pole **2 NC + 1 NO** break before make, slow break *(3)*	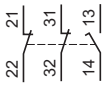	**XCSA702** ⊖	**XCSA712** ⊖	**XCSA722** ⊖	**XCSB702** ⊖	**XCSC702** ⊖
3-pole **3 NC** slow break *(3)*	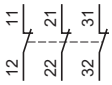	**XCSA802** ⊖	**–**	**–**	**XCSB802** ⊖	**XCSC802** ⊖
Weight (kg)		0.440	0.440	0.440	0.475	0.480

References of switches without actuating key *(5)* with 1 cable entry tapped Pg 13.5

To order a switch with a Pg 13.5 cable entry, replace the last number **(2)** with **1** in the selected reference.
Example: XCSA502 becomes **XCSA501** (some Pg 13.5 references may not be available).

References of switches without actuating key *(5)* with 1 cable entry tapped 1/2" NPT

To order a switch with a 1/2" NPT cable entry, replace the last number **(2)** with **3** in the selected reference.
Example: XCSA502 becomes **XCSA503** (some 1/2" NPT references may not be available).

Complementary characteristics not shown under general characteristics (page 38)

Actuation speed	Maximum: 0.5 m/s, minimum: 0.01 m/s
Resistance to forcible withdrawal of actuating key (locked)	**XCSB** and **XCSC**: F_{1max} = 1500 N; F_{Zh} = 1150 N
Mechanical durability	**XCSA: > 1 million operating cycles** **XCSB and XCSC: 0.6 million operating cycles**
Maximum operating rate	For maximum durability: 600 operating cycles per hour
Minimum force for extraction of actuating key (not locked)	⩾ 20 N
Cable entry	**XCSA**, **XCSB**, **XCSC**: 1 cable entry Entry tapped ISO M20 x 1.5, clamping capacity 7 to 13 mm
Materials	Body: Zamak. Head: Zamak. Safety screws: 5-lobe torque. Protective plate: steel.

References of actuating keys

				
Description	Straight actuating key	Actuating key with wide fixing	Pivoting actuating key	Latch for sliding doors
For XCSA, XCSB or XCSC key-operated switches	**XCSZ01**	**XCSZ02**	**XCSZ03**	**XCSZ05**
Weight (kg)	0.020	0.020	0.095	0.600

(1) Head adjustable in 90° steps through 360°. Blanking plug for operating head slot included with switch.
(2) Unlocking by pushbutton for XCSB●●● and by key-operated lock for XCSC●●● (2 keys included with switch).
(3) Schematic diagrams shown represent the contact states while the actuating key is inserted in the head of the switch.
(4) 1 orange LED 24/48V ∿/⎓ indicator available with the XCSZ31 accessory
1 orange LED 110/240V ∿ indicator available with the XCSZ32 accessory
(5) Actuating keys to be ordered separately (see above).

Other versions: please consult our Customer Care Center.

Dimensions: page 49
Schemes: page 51

Safety detection solutions

Key-operated switches

XCSA, XCSB and XCSC metal, turret head

1 cable entry

Separate components

XCS_820_ODSPH190

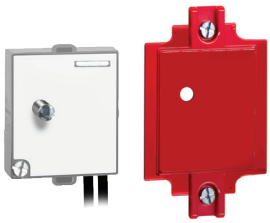

XCSZ3●

Description	For use with	Supply voltage	Reference	Weight (kg)
1 kit including: - 1 orange LED indicator module - 1 cover - Seal - 2 fixing screws	XCSA	∿ or 24/48 V ⎓	**XCSZ31**	0.040
		110/240 V ∿	**XCSZ32**	0.040

Description	For use with	Unit reference	Weight (kg)
Blanking plugs for operating head slot (Sold in lots of 10)	XCSA, XCSB, XCSC	**XCSZ27**	0.050
Keys for forced opening of interlocking device (Sold in lots of 10)	XCSB, XCSC	**XCSZ25**	0.100
Padlocking device t helps to prevent insertion of actuating key, for up to 3 padlocks (padlocks not included)	XCSA, XCSB, XCSC	**XCSZ90**	0.055

PF090313



XCSZ90

Dimensions

Key-operated switches

XCSA●●●

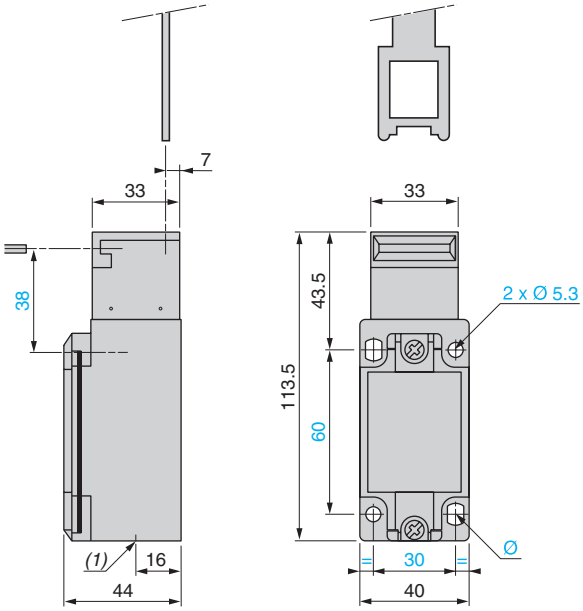

(1) 1 tapped entry for cable gland
Ø: 2 elongated holes Ø 5.3 x 7.3

XCSB●●●, XCSC●●●

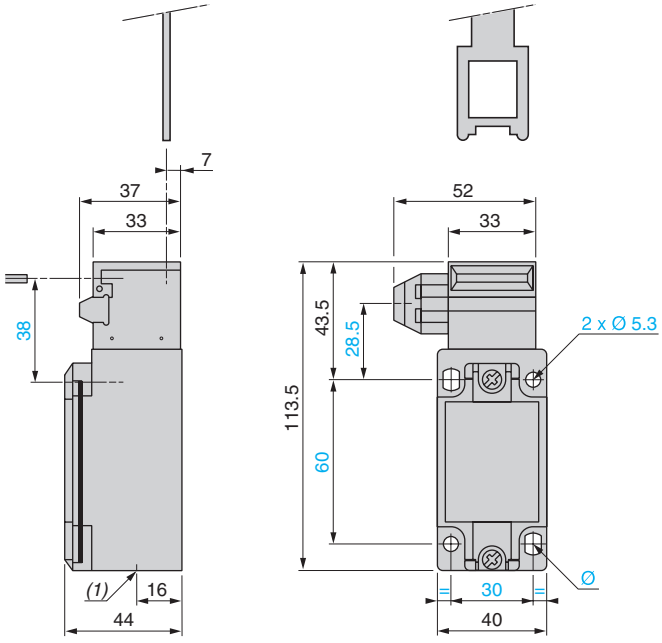

(1) 1 tapped entry for cable gland
Ø: 2 elongated holes Ø 5.3 x 7.3

Actuating keys

XCSZ01

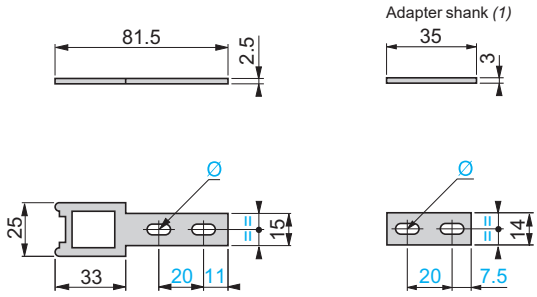

(1) Adapter (included with XCSZ01 actuating key) for replacing, without drilling an additional fixing hole, an XCKJ guard switch with ZCKY07 actuating key by an XCSA, XCSB or XCSC guard switch with XCSZ01 actuating key.

Ø: 2 elongated holes Ø 5.3 x 10

XCSZ02

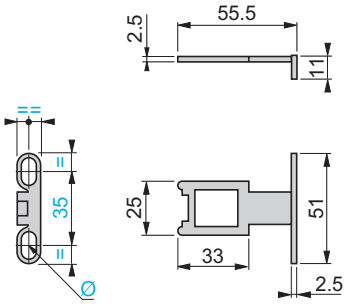

Ø: 2 elongated holes Ø 5.3 x 10

XCSZ03

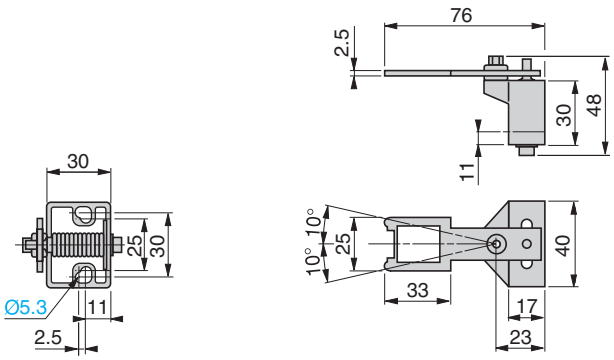

Fixing axis % related to actuating key.

XCSZ05

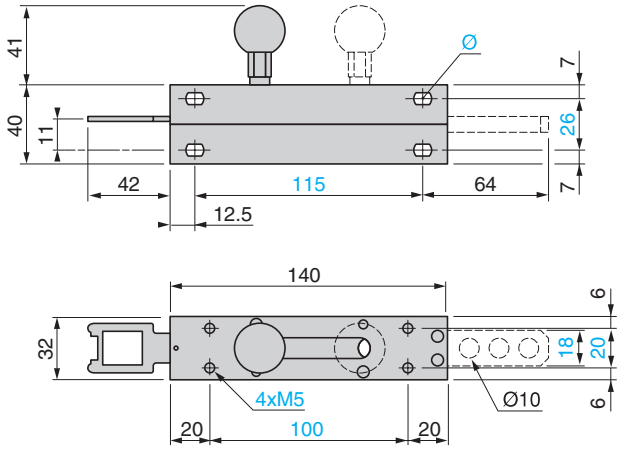

Ø: 4 elongated holes Ø 5.3 x 7.3

Operating radius required for actuating key

XCSZ01

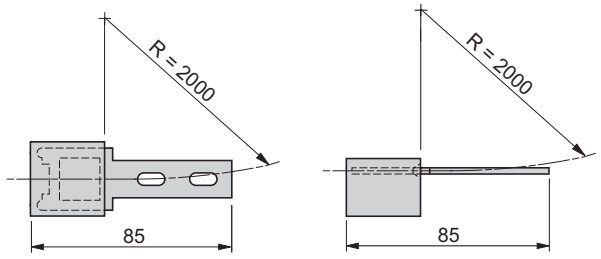

XCSZ02

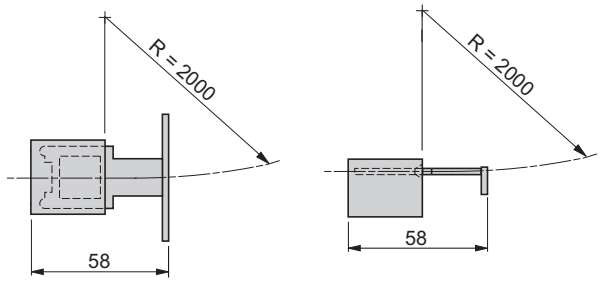

XCSZ03

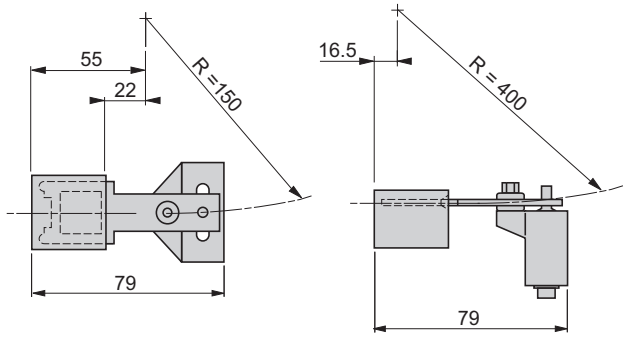

R = minimum radius

References:
page 48

Schemes:
page 51

Safety detection solutions
Key-operated switches
XCSA, XCSB and XCSC metal, turret head
1 cable entry

Setting-up

Functional diagrams

XCS•5•••

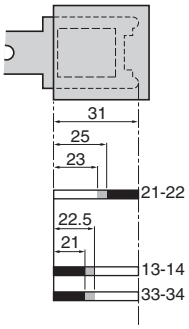

XCS•7•••

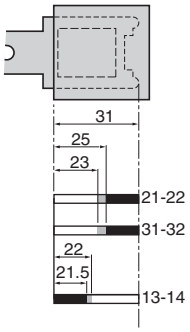

XCS•8•••

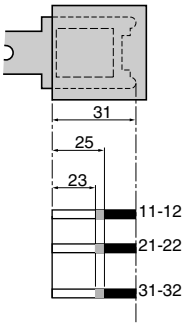

Contact operation

Closed

Open

Transient state

Schemes Note: These schemes are given as examples only, the designer should refer to the relevant safety standards for guidance.

Wiring up to PL=b, category 1 conforming to EN/SO 13849-1

Example with 3-pole 1 NC + 2 NO contact and protection fuse to help prevent shunting of the NC contact, due to either cable damage or tampering.

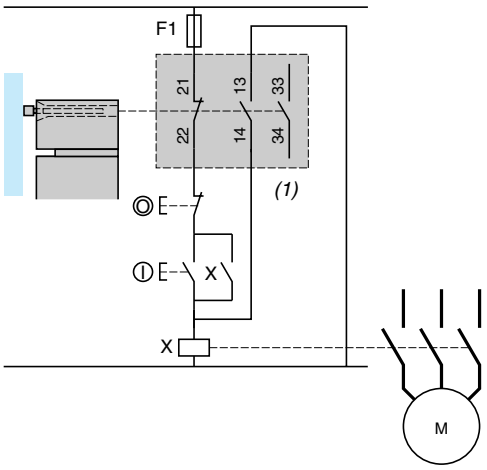

(1) Signaling contact

Wiring up to PL=d, category 3 conforming to EN/ISO 13849-1

Example with 3-pole 1 NC + 2 NO contact with mixed redundancy of the contacts and the associated control relays. To activate K1, it is necessary to remove and re-insert the actuating key when the supply is switched on.

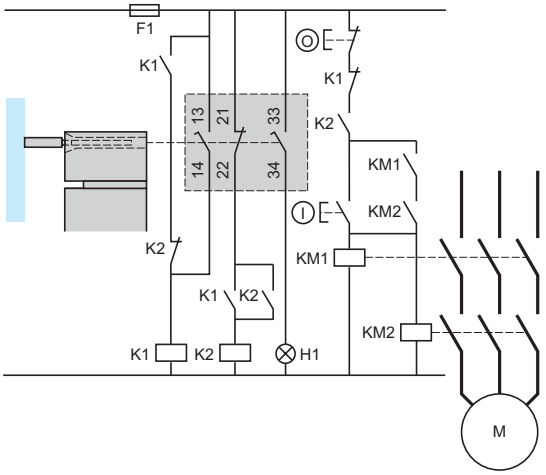

H1: “Actuating key not inserted” indicator

Wiring to PL=e, category 4 conforming to EN/ISO 13849-1 and SIL CL3 conforming to EN/IEC 62061. Wiring method used in conjunction with a safety control unit. (The key-operated switch should be used in conjunction with a safety limit switch to give electrical/mechanical redundancy).

Method for machines with quick rundown time (low inertia)

Locking device based on the principle of redundancy and self-monitoring.
The safety control units provide these functions.

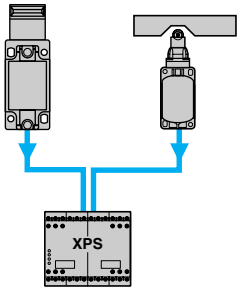

Locking of actuating key and operation in positive mode associated with a safety control unit.

Safety detection solutions

Safety interlock switches

Key-operated with solenoid, turret head

XCSLF and XCSLE slim design

XCSLF metal

Safety interlock switches operated by actuating key

With emergency release mushroom head pushbutton





Pages 54 and 55

Pages 56 and 57

XCSLE plastic

Safety interlock switches operated by actuating key



Pages 58 and 59

Safety detection solutions

Safety interlock switches

Key-operated with solenoid, turret head
XCSLF and XCSLE slim design

Environmental characteristics

Safety interlock switch type		XCSLF (metal)	XCSLE (plastic)
Conformity to standards	Products	EN/IEC 60947-5-1, EN/ISO 13849-1, EN/IEC 62061, UL 508, CSA C22-2 no. 14	
	Machine assemblies	EN/IEC 60204-1, EN/ISO 14119, EN/ISO 12100	
Product certifications		UL, CSA, CCC, EAC	
Maximum safety level *(1)*		PL=e, category 4 conforming to EN/ISO 13849-1 and SIL CL3 conforming to EN/IEC 62061	
Reliability data B_{10D}		5,500,000 (value given for a service life of 20 years, limited by mechanical or contact wear)	
Ambient air temperature	For operation	-25 ...+60 °C	
	For storage	-40…+70 °C	
Vibration resistance		5 gn (10…500 Hz) conforming to EN/IEC 60068-2-6	
Shock resistance		10 gn (duration 11 ms) conforming to EN/IEC 60068-2-27	
Electric shock protection	Conforming to EN/IEC 61140	Class I (cable entries)	Class II (cable entries)
		Class I (M23 connector, 19 pins)	
Degree of protection		IP 65 (XCSL●●●●●●M3, versions with M23 connector) IP 66 and IP 67 (IP 66 for XCSLF●●●●4●● and for XCSLF●●●●6●●) conforming to EN/IEC 60529 and EN/IEC 60947-5-1 *(2)*	
Connection		3 cable entries tapped M20 x 1.5 for ISO cable gland. Clamping capacity 7 to 13 mm or entries tapped for 1/2" NPT conduit or M23 19-pin connector output (18+1PE) 24 V ⎓ versions.	
Material		Zamak case	Polyamide case
		Actuating keys (all types): steel XC60, surface treated	

(1) Using an appropriate and correctly connected safety control unit.

(2) Live parts of these switches are protected to some extent against the penetration of dust and water. However, when installing take all necessary precautions to help prevent the penetration of solid bodies, or liquids with a high dust content, into the actuating key aperture. Use of XCSZ30 blanking plugs for unused key slots can reduce the penetration of unwanted elements (one blanking plug is delivered with the product). Not recommended for use in saline atmospheres.

Contact block characteristics

Safety interlock switch type	**XCSLF●●●●●12** and **XCSLE●●●●●12** (versions with 3 cable entries)	**XCSLF●●●●●●M3** and **XCSLE●●●●●●M3** (versions with M23 connector)
Rated operational characteristics	AC-15 ∼, C300: Ue = 240 V, Ie = 0.75 A DC-13 ⎓, R300: Ue = 250 V, Ie = 0.1 A conforming to EN/IEC 60947-5-1	∼ AC-15, C300: Ue = 24 V, Ie = 1.5 A ⎓ DC-13, R300: Ue = 24 V, Ie = 0.22 A conforming to EN/IEC 60947-5-1
Conventional thermal current in enclosure	Ithe = 4 A (sum of the thermal currents ≤ 15 A)	
Rated insulation voltage	Ui = 250 V degree of pollution 3 conforming to EN/IEC 60947-1 Ui = 300 V conforming to UL 508, CSA C22-2 no. 14	Ui = 60 V degree of pollution 3 conforming to EN/IEC 60947-1 Ui = 50 V conforming to UL 508, CSA C22-2 no. 14
Rated impulse withstand voltage	Uimp = 4 kV conforming to EN/IEC 60947-1	Uimp = 0.8 kV conforming to EN/IEC 60947-1
Positive operation	Contacts with positive opening operation conforming to EN/IEC 60947-5-1	
Minimum switching current	10 mA at 20 V	
Minimum switching voltage	17 V	
Short-circuit protection	4 A cartridge fuse gG (gl) or 6 A fast-blow fuse	
Connection	Clamping capacity on spring terminals: 2 x 0.5 mm² stripped flexible cables, 13 mm long 1 x 1.5 mm² flexible or rigid cable	

Additional characteristics

Actuation speed	Maximum: 0.5 m/s, minimum: 0.01 m/s
Resistance to forcible withdrawal of actuating key (locked)	**XCSLF**: F_{1max} = 3000 N, F_{Zh} = 2300 N **XCSLE**: F_{1max} = 1400 N, F_{Zh} = 1100 N
Shock resistance	**XCSLE**: 1.2 J max. or 4.9 J depending on installation (see page 20) **XCSLF**: 6.4 J max. or 9.6 J (see page 20)
Mechanical durability	**XCSLF** and **XCSLE:** > 1 million operating cycles Emergency release mushroom head pushbutton on **XCSLF**: 30,000 operating cycles
Maximum operating rate	For maximum durability: 600 operating cycles per hour
Minimum force for extraction of actuating key (not locked)	≥ 20 N

Additional characteristics (continued)

Electrical durability

- Conforming to EN/IEC 60947-5-1 Appendix C
- Utilization categories AC-15 and DC-13
- Maximum operating rate: 3,600 operating cycles/hour
- Load factor: 0.5

AC supply
50/60 Hz ∿
inductive circuit

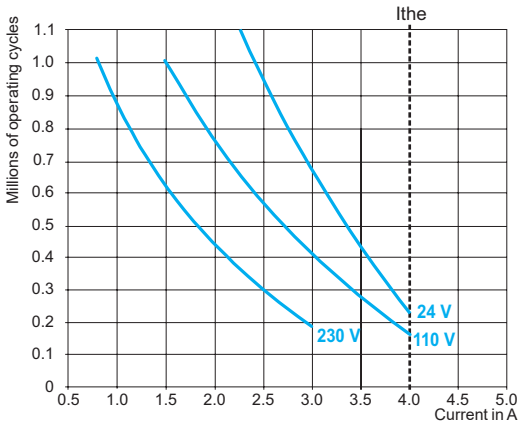

DC supply ⎓
Power broken for 1 million operating cycles

Voltage	**V**	**24**	**48**	**120**
inductive	**W**	16	28	38

Switching capacity

- Conforming to EN/IEC 60947-5-1 Appendix C
- Utilization categories AC-15 and DC-13

Switching capacity 1:
C300 240 V 0.75 A
R300 250 V 0.1 A

Switching capacity 2:
C300 120 V 1.5 A
R300 125 V 0.22 A

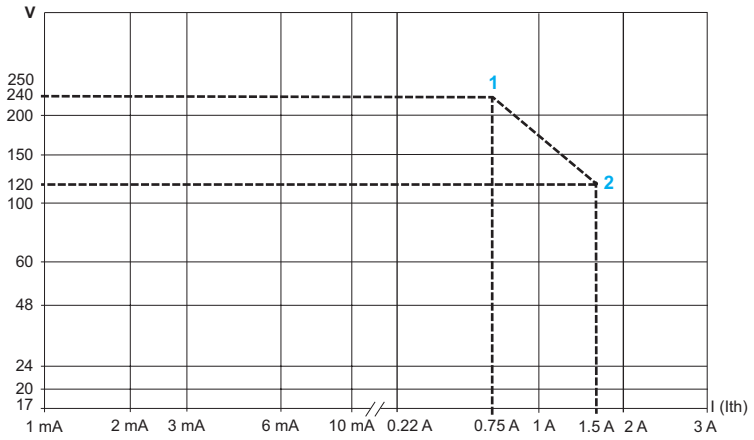

Safety detection solutions

Safety interlock switches

Key-operated with solenoid, turret head *(1)*
XCSLF metal, 3 cable entries

Type of switch	Locking on de-energization and unlocking on energization of solenoid *(2)*				
					
LED indication	Orange LED: “guard open” indication Green LED:“guard closed and locked” indication				
Power supply for the solenoid and the LEDs	24 V ⎓ or ∿ (50/60 Hz on ∿)				
Type of auxiliary contact actuated by the solenoid (locking contacts). Contact states represented with actuating key inserted and solenoid not energized.	1 NC + 1 NO break before make 	2 NC simultaneous 	1 NC + 2 NO break before make 	2 NC + 1 NO break before make 	3 NC simultaneous 
References of switches without actuating key *(3)* (⊖ **NC contact with positive opening operation)** **Types of main contact actuated by the key** **Contact states represented with actuating key inserted** **With 3 cable entries tapped ISO M20 x 1.5**					
2-pole contact **1 NC + 1 NO** break before make, slow break 	**XCSLF2525312** ⊖	–	–	–	–
2-pole contact **2 NC** simultaneous, slow break 	**XCSLF2725312** ⊖	**XCSLF2727312** ⊖	–	–	–
3-pole contact **1 NC + 2 NO** break before make, slow break 	–	–	**XCSLF3535312** ⊖	–	–
3-pole contact **2 NC + 1 NO** break before make, slow break 	–	–	–	**XCSLF3737312** ⊖	–
3-pole contact **3 NC** simultaneous, slow break 	–	–	–	–	**XCSLF3838312** ⊖
Weight (kg)	1.100	1.100	1.100	1.100	1.100
Solenoid and LED characteristics					
Load factor	100%				
Rated operational voltage *(4)*	24 V ⎓ or ∿ or 120 V ∿ or 230 V ∿				
Voltage limits Conforming to EN/IEC 60947-1	- 15%, + 10% of the rated operational voltage (including ripple on ⎓)				
Consumption	< 5.4 W at 20 °C and max. voltage				

References of complete switches with solenoid supply voltage of 120 V or 230 V

To order a switch with a solenoid voltage of 110/120 V ∿, replace the sixth number in the selected reference with **3**.
Example: XCSLF3535312 becomes **XCSLF3535332**. Some 110/120V ∿ references may not be available.
To order a switch with a solenoid voltage of 220/240 V ∿, replace the sixth number in the selected reference with **4**.
Example: XCSLF3535312 becomes **XCSLF3535342**. Some 220/240V ∿ references may not be available.

References of switches with locking on energization and unlocking on de-energization

To order a safety interlock switch with locking on energization and unlocking on de-energization of the solenoid, replace the fifth number in the selected reference with **5**. For these models, the auxiliary contact states are represented with key inserted and solenoid energized.
Example: XCSLF3535312 becomes **XCSLF3535512**. Some references with locking on energization may not be available.

References of complete switches with 3 cable entries tapped for 1/2” NPT conduit

To order a switch with three 1/2” NPT cable entries, replace the last number in the reference with **3**.
Example: XCSLF3535312 becomes **XCSLF3535313.** Some 1/2" NPT references may not be available.

References of actuating keys and separate parts

See page 62.

(1) Head adjustable in 90° steps through 360°. Blanking plug for operating head slot included with switch.
(2) A key-operated lock (2 keys included with switch) enables forced opening of the interlocking mechanism by authorized personnel, allowing withdrawal of the actuating key and subsequent opening of the NC safety contacts (auxiliary release).
(3) Actuating keys to be ordered separately (see page 62).
(4) Common power supply for the solenoid and the LEDs.

Other versions: consult your Customer Care Center.

Presentation: page 52 | Characteristics: page 53 | Dimensions: page 63 | Schemes: page 66

Safety detection solutions

Safety interlock switches

Key-operated with solenoid, turret head *(1)*

XCSLF metal, connector output

Type of switch	**Locking on de-energization and unlocking on energization of solenoid** *(2)*		
			
LED indication	Orange LED: “guard open” indication Green LED: “guard closed and locked” signaling		
Power supply for the solenoid and the LEDs	24 V ⎓ or ∿ (50/60 Hz on ∿)		
Type of auxiliary contact actuated by the solenoid (locking contacts). Contact states represented with actuating key inserted and solenoid not energized.	1 NC + 2 NO break before make 	2 NC + 1 NO break before make 	3 NC simultaneous 

References of switches without actuating key *(3)* (⊖ NC contact with positive opening operation)
Types of main contact actuated by the key
Contact states represented with actuating key inserted
With 19-pin (6 contacts) M23 connector output

3-pole contact **1 NC + 2 NO** break before make, slow break		**XCSLF353531M3** ⊖	–	–
3-pole contact **2 NC + 1 NO** break before make, slow break		–	**XCSLF373731M3** ⊖	–
3-pole contact **3 NC** simultaneous, slow break		–	–	**XCSLF383831M3** ⊖
Weight (kg)		1.100	1.100	1.100

Solenoid and LED characteristics

Load factor		100%
Rated operational voltage *(4)*		24 V ⎓ or ∿
Voltage limits	Conforming to EN/IEC 60947-1	- 15%, + 10% of the rated operational voltage (including ripple on ⎓)
Consumption		< 5.4 W at 20 °C and max. voltage

References of switches with locking on energization and unlocking on de-energization

To order a safety interlock switch with locking on energization and unlocking on de-energization of the solenoid, replace the fifth number in the selected reference with **5**.
For these models, the auxiliary contact states are represented with key inserted and solenoid energized.
Example: XCSLF373731M3 becomes **XCSLF373751M3**. Some references with locking on energization may not be available.

References of actuating keys and separate parts

See page 62.

(1) Head adjustable in 90° steps through 360°. Blanking plug for operating head slot included with switch.
(2) A key-operated lock (two keys included with switch) enables forced opening of the interlocking mechanism by authorized personnel, allowing withdrawal of the actuating key and subsequent opening of the NC safety contacts (auxiliary release).
(3) Actuating keys to be ordered separately (see page 62).
(4) Common power supply for the solenoid and the LEDs.

Note : Due to existing cable connections and to increase your personal safety, safety screws have been used on the front of the product to help prevent unauthorized access.

Other versions: consult your Customer Care Center.

Safety detection solutions

Safety interlock switches

Key-operated with solenoid, turret head *(1)*
XCSLF metal, emergency release pushbutton,
3 cable entries

Type of switch	**Locking on de-energization and unlocking on energization of solenoid** *(2)* **with emergency release by mushroom head pushbutton** *(3)*	
		
LED indication	Orange LED: “guard open” indication Green LED: “guard closed and locked” indication	
Power supply for the solenoid and the LEDs	24 V ⎓ or ∿ (50/60 Hz on ∿)	
Type of auxiliary contact actuated by the solenoid (locking contacts). Contact states represented with actuating key inserted and solenoid not energized.	1 NC + 2 NO break before make 	2 NC + 1 NO break before make 

References of switches without actuating key *(4)* (⊖ NC contact with positive opening operation)
Types of main contact actuated by the key
Contact states represented with actuating key inserted with trigger action mushroom head pushbutton, diameter 40 mm, “turn to release” reset
With 3 entries tapped ISO M20 x 1.5

3-pole contact **1 NC + 2 NO** break before make, slow break		**XCSLF3535412** ⊖	–
3-pole contact **2 NC + 1 NO** break before make, slow break		–	**XCSLF3737412** ⊖
Weight (kg)		1.220	1.220

Solenoid and LED characteristics

Load factor		100%
Rated operational voltage *(5)*		24 V ⎓ or ∿ or 120 V ∿ or 230 V ∿
Voltage limits	Conforming to EN/IEC 60947-1	- 15%, + 10% of the rated operational voltage (including ripple on ⎓)
Consumption		< 5.4 W at 20 °C and max. voltage

References of switches with trigger action mushroom head pushbutton, diameter 40 mm, key no. 455 reset

To order a switch with trigger action mushroom head pushbutton, key no. 455 release, diameter 40 mm at the rear of the product, replace the fifth number in the selected reference with **6**.
Example: XCSLF3535412 becomes **XCSLF3535612.** Some references with trigger action mushroom head pushbutton may not be available.

References of complete switches with solenoid supply voltage of 120 V or 230 V

To order a switch with a solenoid voltage of 110/120 V ∿, replace the sixth number in the selected reference with **3**.
To order a switch with a solenoid voltage of 220/240 V ∿, replace the sixth number in the selected reference with **4**.
Some 110/120V ∿ and 220/240V ∿ references may not be available.

References of complete switches with 3 cable entries tapped for 1/2” NPT conduit

To order a switch with 3 1/2" NPT cable entries, replace the last number in the reference with **3**.
Example: XCSLF3737412 becomes **XCSLF3737413**. Some 1/2" NPT references may not be available.

References of actuating keys and separate parts

See page 62.

(1) Head adjustable in 90° steps through 360°. Blanking plug for operating head slot included with switch.
(2) A key-operated lock (2 keys included with switch) enables forced opening of the interlocking mechanism by authorized personnel, allowing withdrawal of the actuating key and subsequent opening of the NC safety contacts (auxiliary release).
(3) Trigger action, diameter 40 mm, “turn to release” or “key no. 455” reset type.
(4) Actuating keys to be ordered separately (see page 62.).
(5) Common power supply for the solenoid and the LEDs.

Other versions: consult your Customer Care Center.

Presentation: page 52 | Characteristics: page 53 | Dimensions: page 63 | Schemes: page 66

Safety detection solutions

Safety interlock switches

Key-operated with solenoid, turret head *(1)*
XCSLF metal, emergency release pushbutton, connector output

Type of switch	**Locking on de-energization and unlocking on energization of solenoid** *(2)* **with emergency release by mushroom head pushbutton** *(3)*	
		
LED indication	Orange LED: “guard open” indication Green LED: “guard closed and locked” indication	
Power supply for the solenoid and the LEDs	24 V ⎓ or ∿ (50/60 Hz on ∿)	
Type of auxiliary contact actuated by the solenoid (locking contacts). Contact states represented with actuating key inserted and solenoid not energized.	1 NC + 2 NO break before make 	2 NC + 1 NO break before make 

References of switches without actuating key *(4)* (⊖ NC contact with positive opening operation)
Types of main contact actuated by the key
Contact states represented with actuating key inserted with trigger action mushroom head pushbutton, diameter 40 mm, “turn to release” reset
With 19-pin (6 contacts) M23 connector output

3-pole contact **1 NC + 2 NO** break before make, slow break		**XCSLF353541M3** ⊖	–
3-pole contact **2 NC + 1 NO** break before make, slow break		–	**XCSLF373741M3** ⊖
Weight (kg)		1.220	1.220

Solenoid and LED characteristics

Load factor		100%
Rated operational voltage *(5)*		24 V ⎓ or ∿
Voltage limits	Conforming to EN/IEC 60947-1	- 15%, + 10% of the rated operational voltage (including ripple on ⎓)
Consumption		< 5.4 W at 20 °C and max. voltage

References of actuating keys and separate parts

See page 62.

(1) Head adjustable in 90° steps through 360°. Blanking plug for operating head slot included with switch.
(2) A key-operated lock (two keys included with switch) enables forced opening of the interlocking mechanism by authorized personnel, allowing withdrawal of the actuating key and subsequent opening of the NC safety contacts (auxiliary release).
(3) Trigger action, diameter 40 mm, “turn to release”.
(4) Actuating keys to be ordered separately (see page 62).
(5) Common power supply for the solenoid and the LEDs.

Note : Due to existing cable connections and to increase your personal safety, safety screws have been used on the front of the product to help prevent unauthorized access.

Other versions: consult your Customer Care Center.

Safety detection solutions

Safety interlock switches

Key-operated with solenoid, turret head *(1)*
XCSLE plastic, double insulated, 3 cable entries

Type of switch	**Locking on de-energization and unlocking on energization of solenoid** *(2)*				
					
LED indication	Orange LED: “guard open” indication Green LED: “guard closed and locked” indication				
Power supply for the solenoid and the LEDs	24 V ⎓ or ∿ (50/60 Hz on ∿)				
Type of auxiliary contact actuated by the solenoid (locking contacts). Contact states represented with actuating key inserted and solenoid not energized.	1 NO + 1 NC break before make 	2 NC simultaneous 	1 NC + 2 NO break before make 	2 NC + 1 NO break before make 	3 NC simultaneous 

References of switches without actuating key *(3)* (⊖ NC contact with positive opening operation)
Types of main contact actuated by the key
Contact states represented with actuating key inserted
With 3 cable entries tapped ISO M20 x 1.5

2-pole contact **1 NC + 1 NO** break before make, slow break		**XCSLE2525312** ⊖	–	–	–	–
2-pole contact **2 NC** simultaneous, slow break		–	**XCSLE2727312** ⊖	–	–	–
3-pole contact **1 NC + 2 NO** break before make, slow break		–	–	**XCSLE3535312** ⊖	–	–
3-pole contact **2 NC + 1 NO** break before make, slow break		–	–	–	**XCSLE3737312** ⊖	–
3-pole contact **3 NC** simultaneous, slow break		–	–	–	–	**XCSLE3838312** ⊖
Weight (kg)		0.530	0.530	0.530	0.530	0.530

Solenoid and LED characteristics

Load factor		100%
Rated operational voltage *(4)*		24 V ⎓ or ∿ or 120 V ∿ or 230 V ∿
Voltage limits	Conforming to EN/IEC 60947-1	- 15%, + 10% of the rated operational voltage (including ripple on ⎓)
Consumption		< 5.4 W at 20 °C and max. voltage

References of complete switches with solenoid supply voltage of 120 V or 230 V

To order a switch with a solenoid voltage of 110/120 V ∿, replace the sixth number in the selected reference with **3**.
Example: XCSLE2525312 becomes **XCSLE2525332**. Some 110/120 V ∿ references may not be available.
To order a switch with a solenoid voltage of 220/240 V ∿, replace the sixth number in the selected reference with **4**.
Example: XCSLE2525312 becomes **XCSLE2525342**. Some 220/240 V ∿ references may not be available.

References of switches with locking on energization and unlocking on de-energization

To order a safety interlock switch with locking on energization and unlocking on de-energization of the solenoid, replace the fifth number in the selected reference with **5**.
Example: XCSLE2525312 becomes **XCSLE2525512**. Some references with locking on energization may not be available.

References of complete switches with three cable entries tapped for 1/2” NPT conduit

To order a switch with 1/2” NPT cable entries, replace the last number in the reference with **3**.
Example: XCSLE2727312 becomes **XCSLE2727313.** Some 1/2" NPT references may not be available.

References of actuating keys and separate parts

See page 62.

(1) Head adjustable in 90° steps through 360°. Blanking plug for operating head slot included with switch.
(2) A special tool included with the safety interlock switch enables forced opening of the interlocking mechanism by authorized personnel, allowing withdrawal of the actuating key and subsequent opening of the NC safety contacts (auxiliary release).
(3) Actuating keys to be ordered separately (see page 62).
(4) Common power supply for the solenoid and the LEDs.

Other versions: consult your Customer Care Center.

Presentation: page 52 | Characteristics: page 53 | Dimensions: page 63 | Schemes: page 66

Safety detection solutions

Safety interlock switches

Key-operated with solenoid, turret head *(1)*

XCSLE plastic, double insulated, connector output

Type of switch	**Locking on de-energization and unlocking on energization of solenoid** *(2)*	
		
LED indication	Orange LED: “guard open” indication Green LED: “guard closed and locked” indication	
Power supply for the solenoid and the LEDs	24 V ⎓ or ∿ (50/60 Hz on ∿)	
Type of auxiliary contact actuated by the solenoid (locking contacts). Contact states represented with actuating key inserted and solenoid not energized.	1 NC + 2 NO break before make 	2 NC + 1 NO break before make 
References of switches without actuating key *(3)* (⊖ **NC contact with positive opening operation)** **Types of main contact actuated by the key** **Contact states represented with actuating key inserted** **With 16-pin (4 contacts) or 19-pin (6 contacts) M23 connector output**		
3-pole contact **1 NC + 2 NO** break before make, slow break 	**XCSLE353531M3** ⊖	–
3-pole contact **2 NC + 1 NO** break before make, slow break 	–	**XCSLE373731M3** ⊖
Weight (kg)	0.530	0.530

Solenoid and LED characteristics		
Load factor		100%
Rated operational voltage *(4)*		24 V ⎓ or ∿
Voltage limits	Conforming to EN/IEC 60947-1	- 15%, + 10% of the rated operational voltage (including ripple on ⎓)
Consumption		< 5.4 W at 20 °C and max. voltage

References of actuating keys and separate parts

See page 62.

(1) Head adjustable in 90° steps through 360°. Blanking plug for operating head slot included with switch.
(2) A special tool included with the safety interlock switch enables forced opening of the interlocking mechanism by authorized personnel, allowing withdrawal of the actuating key and subsequent opening of the NC safety contacts (auxiliary release).
(3) Actuating keys to be ordered separately (see page 62).
(4) Common power supply for the solenoid and the LEDs.

Note : Due to existing cable connections and to increase your personal safety, safety screws have been used on the front of the product to help prevent unauthorized access.

Other versions: consult your Customer Care Center.

Safety detection solutions
Safety interlock switches
Key-operated with solenoid, turret head
XCSLF metal and XCSLE plastic
Accessories

References of actuating keys






Description	Straight actuating key	Actuating key with wide fixing	Pivoting actuating key	Latch for sliding doors
For XCSLF and XCSLE key-operated switches	**XCSZ01**	**XCSZ02**	**XCSZ03**	**XCSZ05**
Weight (kg)	0.020	0.020	0.095	0.600

Separate parts

PF090313



XCSZ90

Description	Used for	Unit reference	Weight (kg)
Blanking plugs for operating head slot (Sold in lots of 10)	XCSLF, XCSLE	**XCSZ30**	0.050
Keys for forced opening of interlocking device (Sold in lots of 10)	XCSLF	**XCSZ25**	0.100
Padlocking device to help prevent insertion of actuating key, for up to 3 padlocks (padlocks not included)	XCSLF, XCSLE	**XCSZ90**	0.055
Tool for forced opening of interlocking device (Sold in lots of 10)	XCSLE	**XCSZ100**	0.050
Cover safety kit consisting of: ■ 4 x 5-lobe torque screws ■ 1 magnetic screwdriver bit	XCSLF	**XCSZ210**	0.020
	XCSLE	**XCSZ211**	0.020

Characteristics

M23 connectors

Type of connection	Screw thread (metal clamping ring)
Degree of protection	IP 65 (with clamping ring correctly tightened)
Ambient air temperature	-25…+110 °C
Connection	To solder terminals. Maximum conductor c.s.a.: 1 mm^2 Cable gland: no. 13 metal (Pg 13.5) Clamping capacity: 9 to 12 mm
LED signaling	–
Nominal voltage	60 V ∼, 75 V ⎓
Nominal current	7.5 A
Insulation resistance	> 10^{12} Ω
Contact resistance	≤ 5 mΩ

References

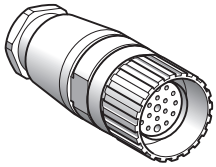

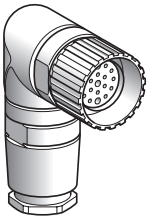

Type of connector	Number of contacts	Cable connection	Type	Reference	Weight (kg)
Female, M23	19	To solder terminals	Straight	**XZCC23FDM190S**	0.080
			Elbowed	**XZCC23FCM190S**	0.150

Dimensions

XZCC23FDM190S

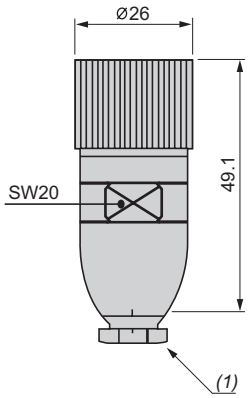

XZCC23FCM190S

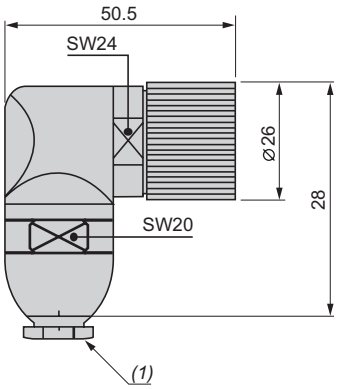

(1) No. 13 metal cable gland

Connections

XZCC23F●M190S

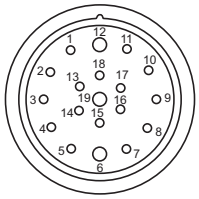

Safety detection solutions
Safety interlock switches
Key-operated with solenoid, turret head
XCSLF metal
XCSLE plastic

Dimensions
Metal safety interlock switches
XCSLF•••••••

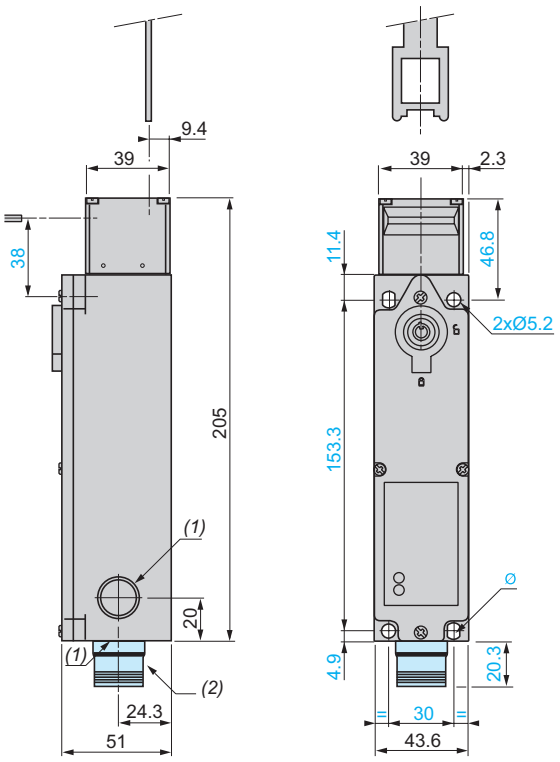

Ø: 2 elongated holes Ø 7 x 5.2

XCSLF•••••••, with emergency release mushroom head pushbutton

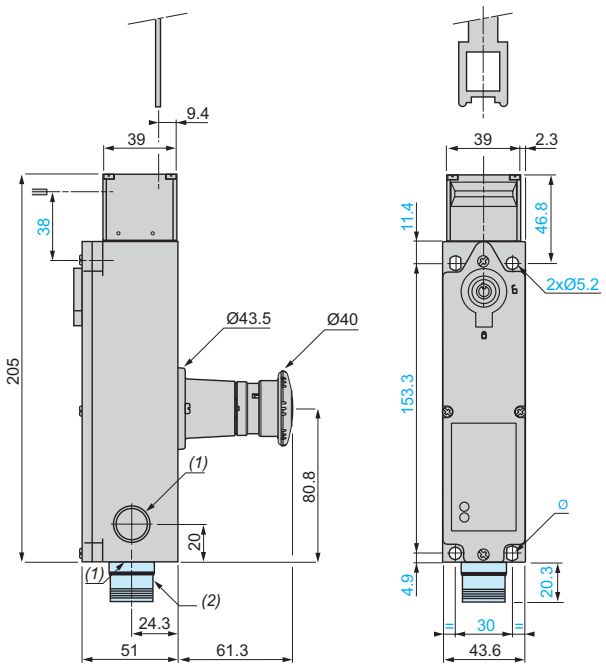

Ø: 2 elongated holes Ø 7 x 5.2

Plastic safety interlock switches
XCSLE•••••••

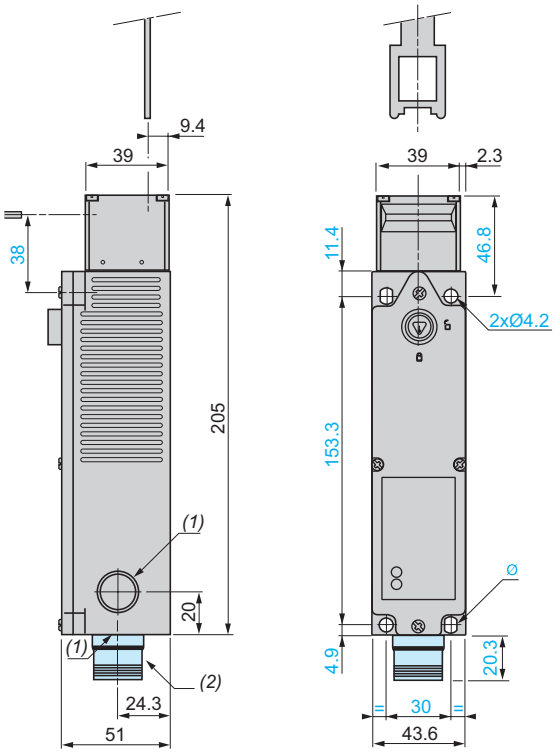

Ø: 2 elongated holes Ø 6.2 x 4.2

(1) 3 tapped entries for cable gland.
(2) Version with M23 connector.

Safety detection solutions
Safety interlock switches
Key-operated with solenoid, turret head
XCSLF metal
XCSLE plastic

Dimensions (continued)

XCSZ01

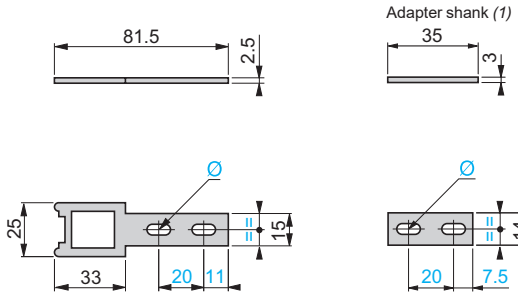

(1) Adapter (included with XCSZ01 actuating key) for replacing, without drilling an additional fixing hole, XCKJ or XCSL5/7 safety interlock switches with ZCKY07 actuating key by an XCSLF/LE safety interlock switch with XCSZ01 actuating key.

Ø: 2 elongated holes Ø 5.3 x 10

XCSZ02

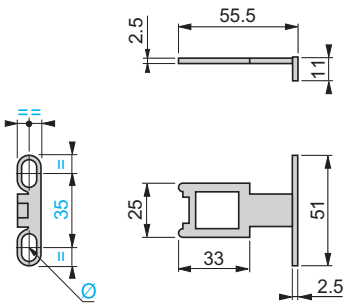

Ø: 2 elongated holes Ø 5.3 x 10

XCSZ03

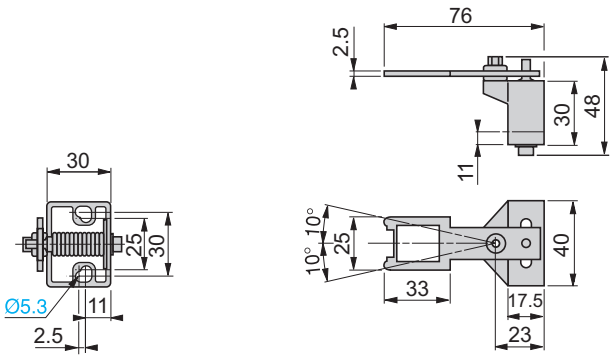

Fixing axis % related to actuating key.

XCSZ05

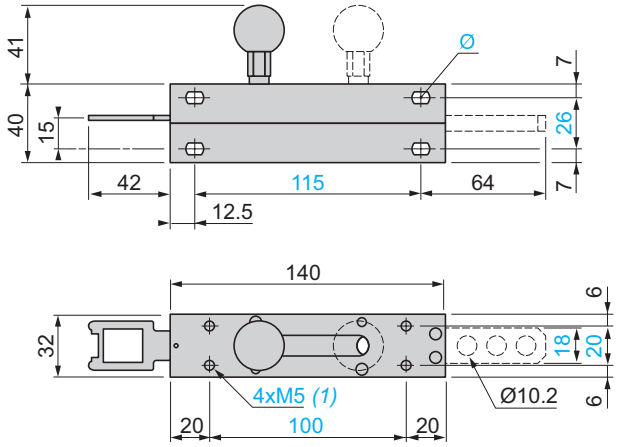

(1) Depth: 10
Ø: 4 elongated holes Ø 5.2 x 8

Actuation radius

XCSZ01

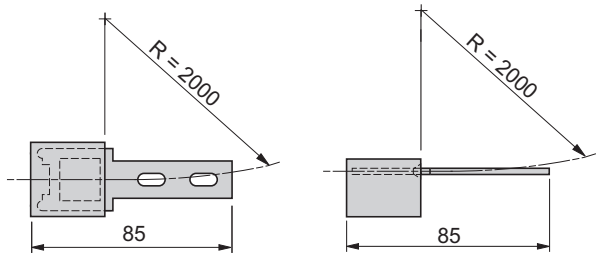

XCSZ02

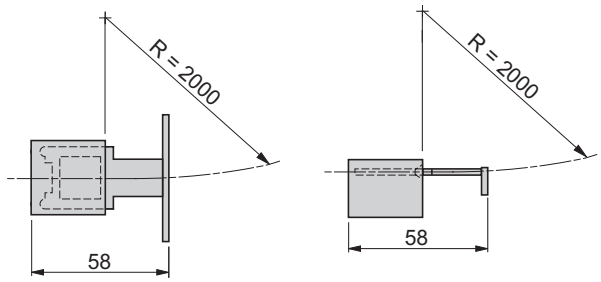

XCSZ03

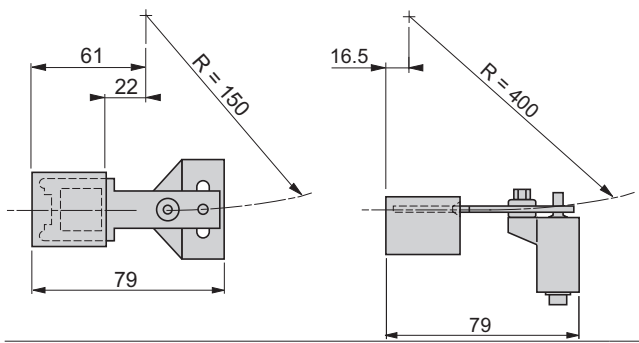

R = minimum radius

Safety detection solutions
Safety interlock switches
Key-operated with solenoid, turret head
XCSLF metal
XCSLE plastic

Operation

Functional diagrams

XCSLF25●●● XCSLE25●●●

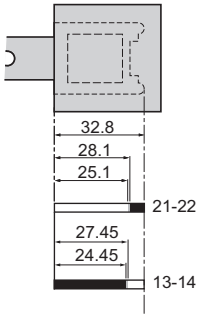

XCSLF27●●● XCSLE27●●●

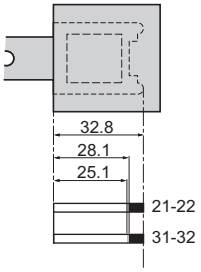

XCSLF35●●● XCSLE35●●●

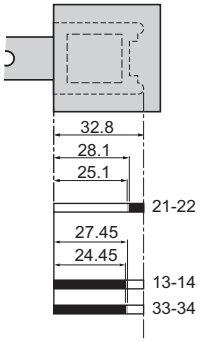

XCSLF37●●● XCSLE37●●●

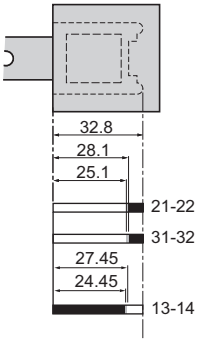

XCSLF38●●● XCSLE38●●●

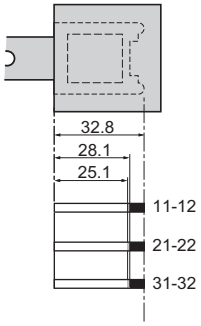

Contact operation

■ Closed □ Open ■ Transient state

Connection examples

The contact states are represented with the actuating key inserted and the solenoid not energized

Note: These schemes are given as examples only, the designer should refer to the relevant safety standards for guidance.

Wiring up to PL=b, category 1 conforming to EN/ISO 13849-1

Wiring example with protection fuse to help prevent shunting of the NC contact, due to either cable damage or tampering

1 NC + 1 NO locking on de-energization and 1 NC + 1 NO auxiliary contacts

XCSLF25253●● and **XCSLE25253●●**

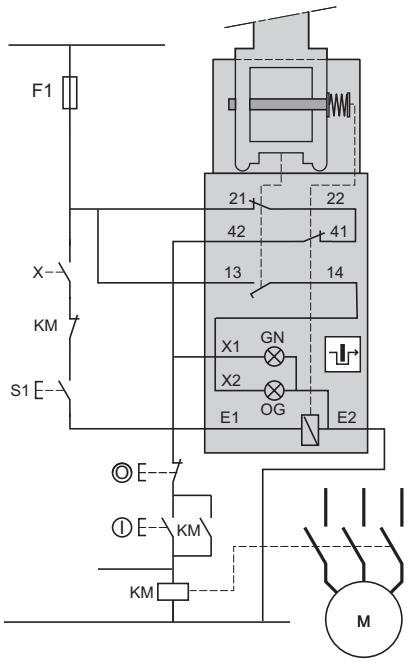

E1-E2: Solenoid supply
21-22: Safety contact, key position monitoring
13-14: Safety contact, key position signaling
41-42: Solenoid position monitoring contact
13-X2/E2: LED (orange): key withdrawn
41-X1/E2: LED (green): key inserted and locked
22-41 : Safety pre-wiring mandatory
S1: Manual release button
X: Unlocking signal

Wiring up to PL=d, category 3 conforming to EN/ISO 13849-1

Wiring example with redundancy for the safety interlock switch contacts, without monitoring or redundancy in the power circuit.

2 NC + 1 NO locking on de-energization and 2 NC + 1 NO auxiliary contacts

XCSLF37373●● and **XCSLE37373●●**

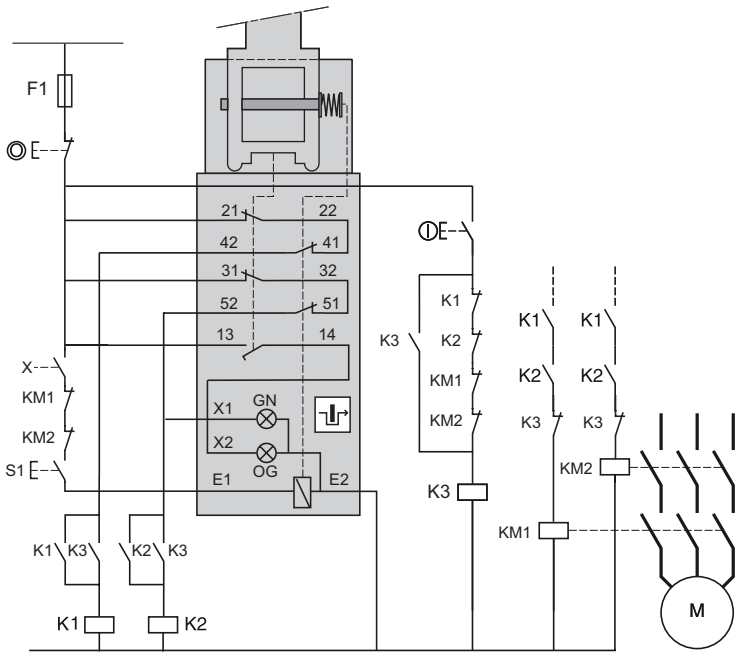

E1-E2: Solenoid supply
21-22 and 31-32: Redundant safety contacts, key position monitoring
41-42 and 51-52: Redundant contacts, solenoid position monitoring
13-14: Safety contact, key position signaling
13-X2/E2: LED (orange): key withdrawn
51-X1/E2: LED (green): key inserted and locked
22-41 and 32-51: Safety pre-wiring mandatory
S1: Manual release button
X: Zero speed or unlocking signal

Safety detection solutions
Safety interlock switches
Key-operated with solenoid, turret head
XCSLF metal
XCSLE plastic

Connection examples (continued)

The contact states are represented with the actuating key inserted and the solenoid not energized.

Wiring up to PL=e, category-4 conforming to EN/ISO 13849-1 and EN/IEC 62061 (assuming that failure of the single mechanical point can be excluded)

Wiring example with 2-LED module associated with an XPSUA● *(1)* safety control unit

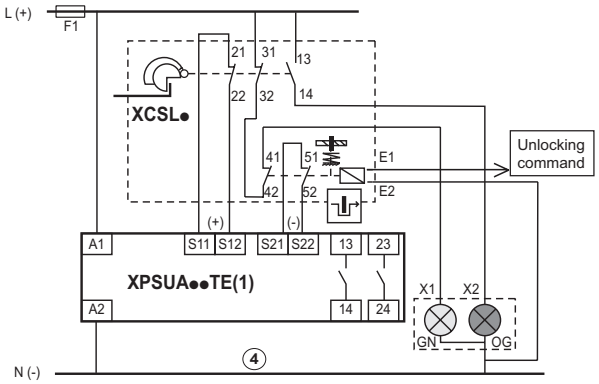

(1) XPSUAF●TE /XPSUAK●TE/XPSUAT●TE

Wiring to PL=e, category 4 conforming to EN/ISO 13849-1 and SIL CL3 conforming to EN/IEC 62061. Wiring method used in conjunction with an XPS safety control unit (the safety interlock switch should be used in conjunction with a safety limit switch to achieve electrical/mechanical redundancy).

Method for machines with long rundown time (high inertia)

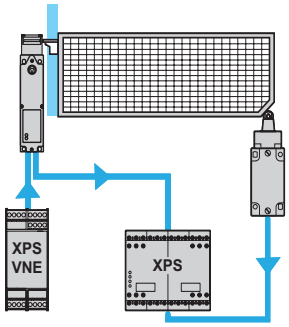

Interlocking device for actuating key fitted on guard and zero speed detection.

E1-E2: Solenoid supply
13-14: Safety contact, key position signaling
13-X2/E2: LED (orange): key not inserted
41-X1/E2: LED (green): key inserted and locked
21-22 and 31-32: Redundant safety contacts, key position monitoring
41-42 and 51-52: Redundant contacts, solenoid position monitoring

19-pin M23 connectors

XCSLF3535●● and XCSLE3535●●

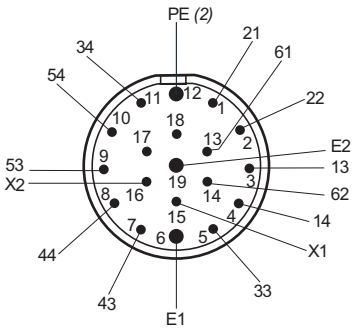

XCSLF3737●● and XCSLE3737●●

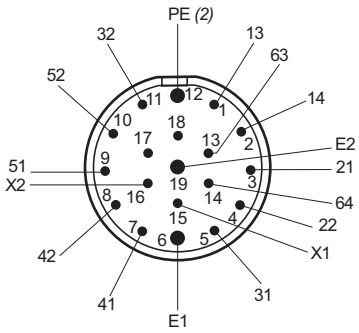

XCSLF3837●● and XCSLE3837●●

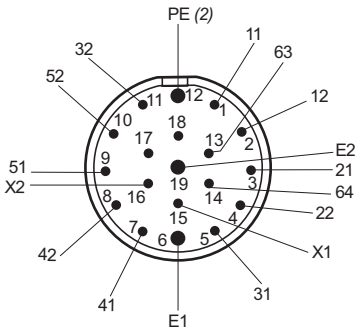

XCSLF3838●● and XCSLE3838●●

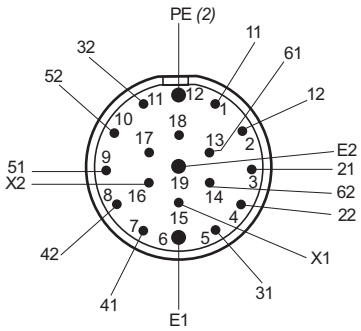

(2) PE (Protective Earth) connection

Safety detection solutions
Safety interlock switches
Key-operated with solenoid, turret head
XCSE and XCSTE rectangular design

XCSE metal

Safety interlock switches operated by actuating key



Page 70

XCSTE plastic

Safety interlock switches operated by actuating key

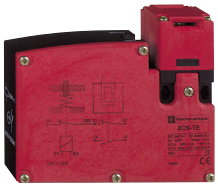

Page 76

Environmental characteristics

Safety interlock switch type		XCSE (metal)	XCSTE (plastic)
Conformity to standards	Products	EN/IEC 60947-5-1, UL 508, CSA C22-2 no. 14	EN/IEC 62061, EN/IEC 60947-1
	Machine assemblies	EN/IEC 60204-1, EN/ISO 14119	
Product certifications		UL, CSA, CCC, EAC	UL, CSA, CCC, EAC
Maximum safety level *(1)*		PL=e, category 4 conforming to EN/ISO 13849-1 and SIL 3 conforming to EN/IEC 61508	
Reliability data B_{10D}		5,000,000 (data value for a service life of 20 years can be limited by contact and mechanical wear)	
Ambient air temperature	For operation	-25…+40 °C	-25…+60 °C
	For storage	-40…+70 °C	
Vibration resistance		5 gn (10…500 Hz) conforming to EN/IEC 60068-2-6	
Shock resistance		10 gn (duration 11 ms) conforming to EN/IEC 60068-2-27	
Electric shock protection		Class I conforming to EN/IEC 61140	Class II conforming to EN/IEC 61140
Degree of protection		**IP 67 conforming to EN/IEC 60529 and EN/IEC 60947-5-1** *(2)*	
Cable entry		2 entries tapped ISO M20 x 1.5 (clamping capacity 7 to 13 mm) or tapped for Pg 13.5 cable gland (clamping capacity 8 to 12 mm) or for 1/2" NPT conduit	1 entry tapped M16 x 1.5 (clamping capacity 4.5 to 10 mm) or tapped for Pg 11 cable gland (clamping capacity 7 to 10 mm) or for 1/2" NPT conduit using metal adapter DE9RA1012 with Pg 11 tapped entry
Connecting cable		–	4 x 0.5 mm^2
Materials		Zamak case	Polyamide PA66 fibreglass impregnated case
		Actuating keys (all types): steel XC60, surface treated	

(1) Using an appropriate and correctly connected safety control unit.

(2) Live parts of these switches are protected to some extent against the penetration of dust and water. However, when installing take all necessary precautions to help prevent the penetration of solid bodies, or liquids with a high dust content, into the actuating key aperture. Use of XCSZ27 (with XCSE) or XCSZ28 (with XCSTE) blanking plugs for unused key slots can reduce the penetration of unwanted elements (one blanking plug is delivered with the product). Not recommended for use in saline atmospheres.

Contact block characteristics

Rated operational characteristics	2 and 3 contacts, slow break	**XCSE**, **XCSTE**: ∼ AC-15, B300: Ue = 240 V, Ie = 1.5 A or Ue = 120 V, Ie = 3 A All models: ⎓ DC-13, Q300: Ue = 250 V, Ie = 0.27 A or Ue = 125 V, Ie = 0.55 A conforming to EN/IEC 60947-5-1
Conventional thermal current in enclosure		**XCSE**, **XCSTE** 2 and 3 slow break contact versions: Ithe = 6 A
Rated insulation voltage	2 and 3 contacts	3 contacts (**XCSE**), 2 contacts (**XCSTE**): Ui = 500 V conforming to EN/IEC 60947-1; Ui = 300 V conforming to UL 508, CSA C22-2 no. 14
Rated impulse withstand voltage	2 and 3 contacts	3 contacts (**XCSE**), 2 contacts (**XCSTE**): Uimp = 6 kV conforming to EN/IEC 60947-5-1
Positive operation		NC contacts with positive opening operation conforming to EN/IEC 60947-5-1, Section 3
Resistance across terminals		⩽ 30 mΩ conforming to EN/IEC 60947-5-4
Short-circuit protection	2 and 3 contacts	3 contacts (**XCSE**), 2 contacts (**XCSTE**): 10 A cartridge fuse type gG (gl)
Connection Screw clamp terminals	2 and 3 contacts	3 contacts **(XCSE)**, 2 contacts **(XCSTE)**: Clamping capacity, min: 1 x 0.5 mm^2, max: 2 x 1.5 mm^2 with or without cable end

Complementary characteristics

Actuation speed	Maximum: 0.5 m/s, minimum: 0.01 m/s
Resistance to forcible withdrawal of actuating key (locked)	**XCSE**: F_{1max} = 2600 N; F_{Zh} = 2000 N; **XCSTE**: F_{1max} = 650 N; F_{Zh} = 500 N
Mechanical durability	**XCSE: > 1 million operating cycles** **XCSTE: 1 million operating cycles**
Maximum operating rate	For maximum durability: 600 operating cycles per hour
Minimum force for extraction of actuating key (not locked)	⩾ 20 N
Materials	Body and head: Zamak (XCSE) Body and head: polyamide PA66, fibreglass impregnated (XCSTE)

Electrical durability

- Conforming to EN/IEC 60947-5-1 Appendix C
- Utilization categories AC-15 and DC-13
- Maximum operating rate: 3600 operating cycles/hour
- Load factor: 0.5

XCSE 3-contact and XCSTE 2-contact version, slow break

AC supply
50/60 Hz ∼
⎓ inductive circuit

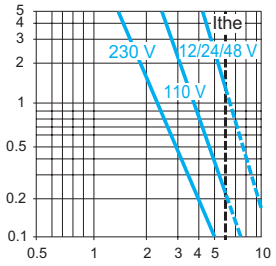

DC supply ⎓
Power broken in W for 5 million operating cycles.

Voltage	V	24	48	120
⎓	W	13	9	7

Safety detection solutions

Safety interlock switches

Key-operated with solenoid, turret head *(1)*

XCSE metal, 2 cable entries

Type of switch	Locking on de-energization and unlocking on energization of solenoid *(2)*				
					
LED indication	Orange LED: “guard open” signaling (not available on 3NC main contact models). Green LED: “guard closed and locked” signaling.				
Solenoid supply voltage	24 V ⎓ or ∿ (50/60 Hz on ∿)		48 V ⎓ or ∿ (50/60 Hz on ∿)	110/120 V ⎓ or ∿ *(3)* (50/60 Hz on ∿)	220/240 V ⎓ or ∿ *(3)* (50/60 Hz on ∿)
Types of auxiliary contacts actuated by the solenoid (locking contacts). Contact states represented with actuating key inserted and solenoid not energized.	NC + NO 43 51 44 52	2 NC 41 51 42 52	NC + NO 43 51 44 52	NC + NO 43 51 44 52	NC + NO 43 51 44 52
References of switches without actuating key *(5)* **(⊖ NC contact with positive opening operation)** **Types of main contacts actuated by the key** **Contact states represented with actuating key inserted** **With 2 cable entries tapped ISO M20 x 1.5**					
3-pole **NC + NO + NO** (2 NO break before make) slow break 21 13 33 22 14 34	**XCSE5312** ⊖	**–**	**XCSE5322** ⊖	**XCSE5332** ⊖	**XCSE5342** ⊖
3-pole **NC + NC + NO** (NO break before make) slow break 21 31 13 22 32 14	**XCSE7312** ⊖	**XCSE73127** ⊖	–	**XCSE7332** ⊖	**XCSE7342** ⊖
3-pole **NC + NC + NC** slow break 11 21 31 12 22 32	**XCSE8312** ⊖ *(4)*	**XCSE83127** ⊖ *(4)*	–	–	–
Weight (kg)	1.140	1.140	1.140	1.140	1.140

References of switches with locking on energization and unlocking on de-energization

To order a safety interlock switch with locking on energization and unlocking on de-energization of the solenoid, replace the second number **(3)** with **5** in the references shown above. Example: XCSE5312 becomes **XCSE5512**. For these models, the auxiliary contacts states are also represented with key inserted and solenoid not energized. 2 NC auxiliary contact models cannot be ordered with locking on energization.
Some references with locking on energization may not be available.

References of switches with locking on de-energization and unlocking on energization with emergency release by mushroom head pushbutton

To order a switch with locking on de-energization and with emergency release pushbutton replace the second number **(3)** with **4** in the references shown above.
Example: XCSE7312 becomes **XCSE7412**.
Some references with trigger action mushroom head pushbutton may not be available.

References of switches with 2 cable entries tapped Pg 13.5 or 1/2" NPT

To order a switch with 2 cable entries for Pg 13.5 cable gland:
- replace the last number **(2)** with **1** in the selected reference. Example: XCSE5312 becomes **XCSE5311**.
- for switches with 7 at the end of the reference, replace the **2** before the 7 with **1** in the selected reference. Example: XCSE73127 becomes **XCSE73117.**

To order a switch with 2 cable entries for 1/2" NPT conduit:
- replace the last number **(2)** with **3** in the selected reference. Example: XCSE5312 becomes **XCSE5313**.
- for switches with 7 at the end of the reference, replace the **2** before the 7 with **3** in the selected reference. Example: XCSE73127 becomes **XCSE73137.**

Some Pg 13 and 1/2" NPT references may not be available.

References of actuating keys

See page 71

(1) Head adjustable in 90° steps through 360°. Blanking plug for operating head slot included with switch.
(2) A key-operated lock (2 keys included with switch) enables forced opening of the interlocking mechanism, by authorized personnel, allowing withdrawal of the actuating key and subsequent opening of the NC safety contacts (auxiliary release).
(3) For use on 110/120 V ⎓ or 220/240 V ⎓, remove the LED indicator module.
(4) Switches supplied with a single green LED.
(5) Actuating keys to be ordered separately (see page 71).

Other versions: please consult our Customer Care Center.

Dimensions: page 72
Schemes: page 73

Safety detection solutions
Safety interlock switches
Key-operated with solenoid, turret head
XCSE metal, 2 cable entries

Solenoid characteristics					
Load factor	100%				
Rated operational voltage	∿ or ⎓ **24 V**	∿ or ⎓ **24 V**	∿ or ⎓ **48 V**	∿ or ⎓ **110/120 V**	∿ or ⎓ **220/240 V**
Voltage limits Conforming to EN/IEC 60947-1	- 15%, + 10% of the rated operational voltage (including ripple on ⎓)				
Service life	20,000 hours				
Consumption	Inrush: 10 VA. Sealed: 10 VA				
LED indicator characteristics					
Rated insulation voltage	50 V conforming to EN/IEC 60947-1			250 V conforming to EN/IEC 60947-1	
Current consumption	7 mA			7 mA	
Rated operational voltage	∿ **or 24/48 V** ⎓			**110/240 V** ∿	
Voltage limits	∿ or 20...52 V ⎓ (including ripple)			95...264 V ∿ (including ripple)	
Service life	100,000 hours			100,000 hours	
Protection against overvoltages	Yes			Yes	

Separate components

PF080313



XCSZ90

Description	For use with	Key withdrawal positions from lock	Unit reference	Weight (kg)
Blanking plugs for operating head slot (Sold in lots of 10)	XCSE	–	**XCSZ27**	0.050
Keys for forced opening of interlocking device (Sold in lots of 10)	XCSE	–	**XCSZ25**	0.100
Padlocking device to help prevent insertion of actuating key, for up to 3 padlocks (padlocks not included)	XCSE	–	**XCSZ90**	0.055

PF539550_A



DE9RA2012

Description	For use with	Unit reference	Weight (kg)
1/2" NPT conduit female, M20 male adapter (Sold in lots of 5)	XCSE	**DE9RA2012**	0.048
M20 x 1.5 female, Pg 13.5 male adapter (Sold in lots of 5)	XCSE	**DE9RP13520**	0.032

References of actuating keys






Description	Straight actuating key	Actuating key with wide fixing	Pivoting actuating key	Latch for sliding doors
For XCSE key-operated switches	**XCSZ01**	**XCSZ02**	**XCSZ03**	**XCSZ05**
Weight (kg)	0.020	0.020	0.095	0.600

Safety detection solutions
Safety interlock switches
Key-operated with solenoid, turret head
XCSE metal, 2 cable entries

Dimensions
Safety interlock switches
XCSE●●●●

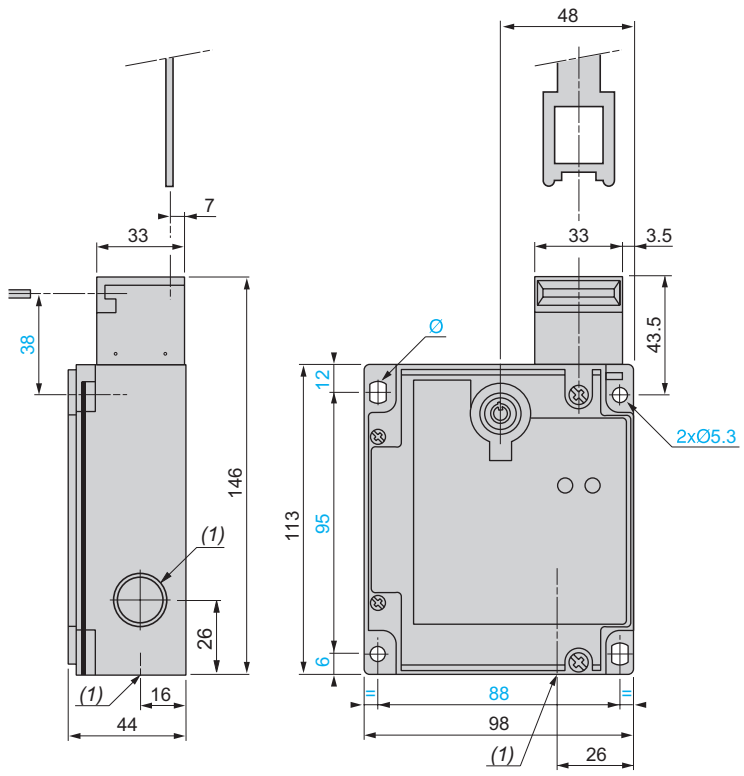

(1) 1 tapped entry for cable gland.
Ø: 2 elongated holes Ø 5.3 x 7.3

M20 x 1.5 adapter
DE9RP13520

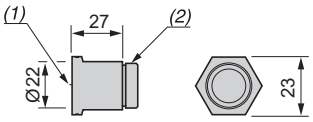

(1) M20 x 1.5 tapped entry
(2) Pg 13.5 threaded shank

1/2" NPT conduit adapter
DE9RA2012

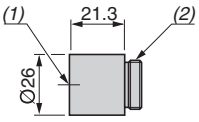

(1) Tapped entry for 1/2" NPT conduit
(2) M20 x 1.5 threaded shank

References:
page 70

Actuating keys

XCSZ01

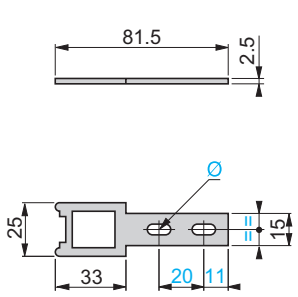

(1) Adapter (included with XCSZ01 actuating key) for replacing, without drilling an additional fixing hole, an XCKJ guard switch with ZCKY07 actuating key by an XCSA, XCSB or XCSC guard switch with XCSZ01 actuating key.

Ø: 2 elongated holes Ø 5.3 x 10

XCSZ02

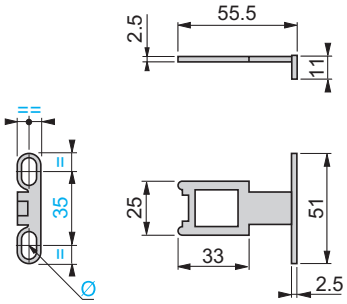

Ø: 2 elongated holes Ø 5.3 x 10

XCSZ03

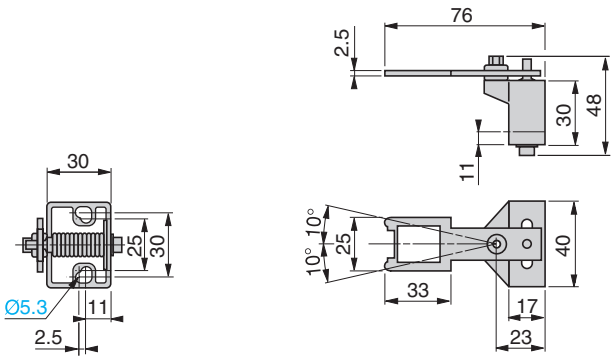

Fixing axis % related to actuating key.

XCSZ05

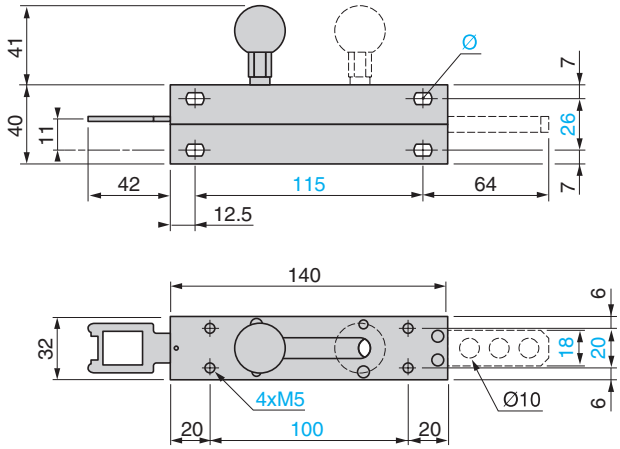

Ø: 4 elongated holes Ø 5.3 x 7.3

Operating radius required for actuating key

XCSZ01

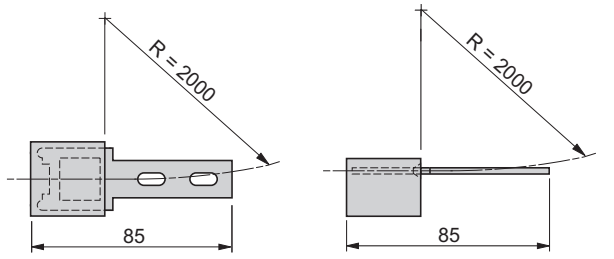

XCSZ02

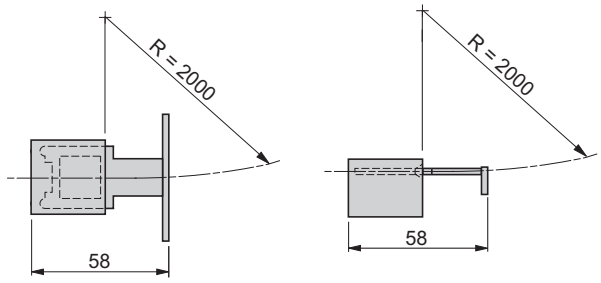

XCSZ03

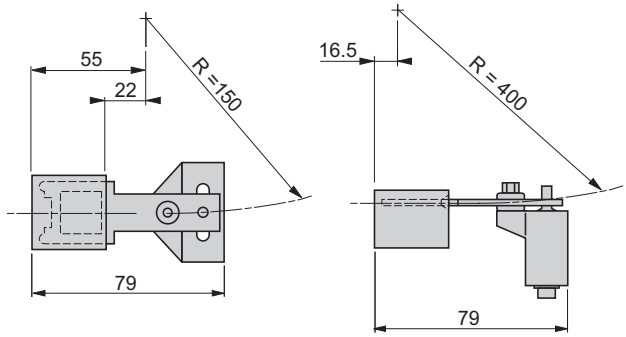

R = minimum radius

References:
page 48

Schemes:
page 51

Safety detection solutions
Safety interlock switches
Key-operated with solenoid, turret head
XCSE metal, 2 cable entries

Setting-up

Functional diagrams

XCS•5•••

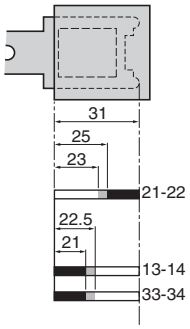

XCS•7•••

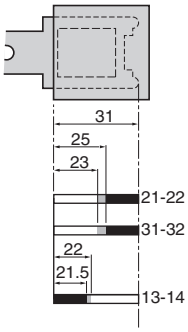

XCS•8•••

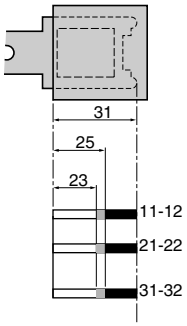

Contact operation

Closed

Open

Transient state

Schemes

Contact states are represented with the actuating key inserted and the solenoid not energized.

Note: These schemes are given as examples only, the designer should refer to the relevant safety standards for guidance.

Wiring to PL=b, category 1 conforming to EN/ISO 13849-1

Example with 3-pole NC + NO + NO contact and protection fuse to help prevent shunting of the NC contact, due to either cable damage or tampering.

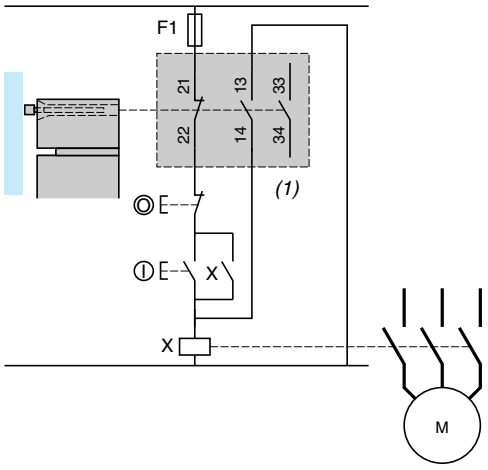

(1) Signaling contact

Wiring to PL=d, category 3 conforming to EN/ISO 13849-1

Example with 3-pole NC + NO + NO contact with mixed redundancy of the contacts and the associated control relays. To activate K1, it is necessary to remove and re-insert the actuating key when the supply is switched on.

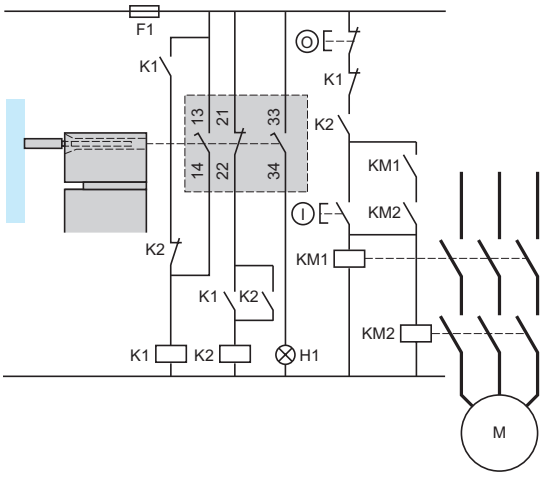

H1: "Actuating key not inserted" indicator

References: page 70
Dimensions: page 72

Safety detection solutions
Safety interlock switches
Key-operated with solenoid, turret head
XCSE metal, 2 cable entries

Schemes (continued)

Contact states are represented with the actuating key inserted and the solenoid not energized.

Note: These schemes are given as examples only, the designer should refer to the relevant safety standards for guidance.

Wiring to PL=b, category 1 conforming to EN/ISO 13849-1

Wiring examples with protection fuse to help prevent shunting of the NC contact, due to either cable damage or tampering.

Locking on de-energization, NC + NO + NO

XCSE53●●

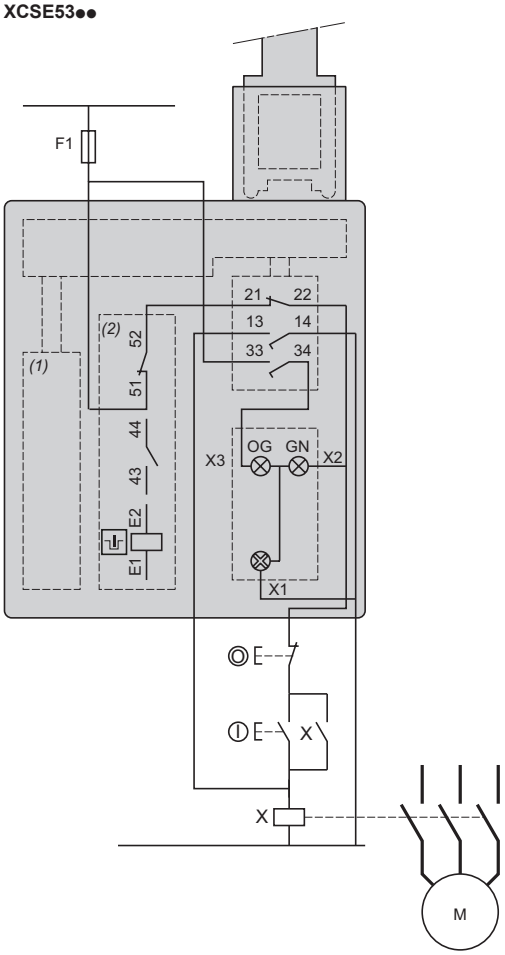

(1) Solenoid

(2) Auxiliary contact

E1-E2: Solenoid supply

43-44: Solenoid position signaling contact

51-52: Solenoid position monitoring contact

21-22: Safety contact: key position monitoring

33-34: Safety contact: key position signaling

13-14: Safety contact for detecting a possible shunt on 21-22 NC contact

33-X1: LED (orange): key withdrawn

51-X1: LED (green): key inserted and locked

21-52: Safety pre-wiring mandatory

Locking on energization, NC + NO + NO

XCSE55●●

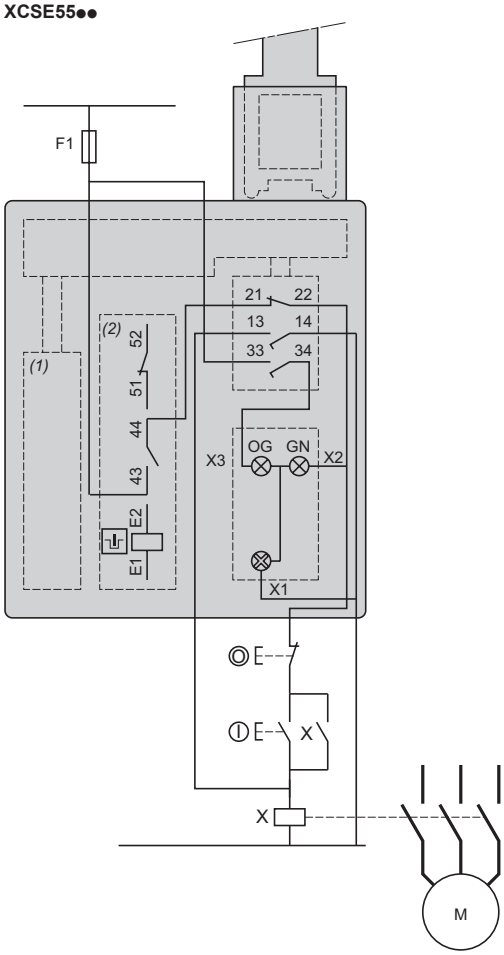

(1) Solenoid

(2) Auxiliary contact

E1-E2: Solenoid supply

43-44: Solenoid position signaling contact

51-52: Solenoid position monitoring contact

21-22: Safety contact: key position monitoring

33-34: Safety contact: key position signaling

13-14: Safety contact for detecting a possible shunt on 21-22 NC contact

33-X1: LED (orange): key withdrawn

43-X1: LED (green): key inserted and locked

21-44: Safety pre-wiring mandatory

References: page 70

Dimensions: page 71

Safety detection solutions
Safety interlock switches
Key-operated with solenoid, turret head
XCSE metal, 2 cable entries

Schemes (continued)

Contact states are represented with the actuating key inserted and the solenoid not energized.

Note: These schemes are given as examples only, the designer should refer to the relevant safety standards for guidance.

Wiring to PL=d, category 3 conforming to EN/ISO 13849-1

Wiring examples with redundancy for the safety interlock switch contacts, without monitoring or redundancy in the power circuit

Locking on de-energization, NC + NC + NO

XCSE73●●

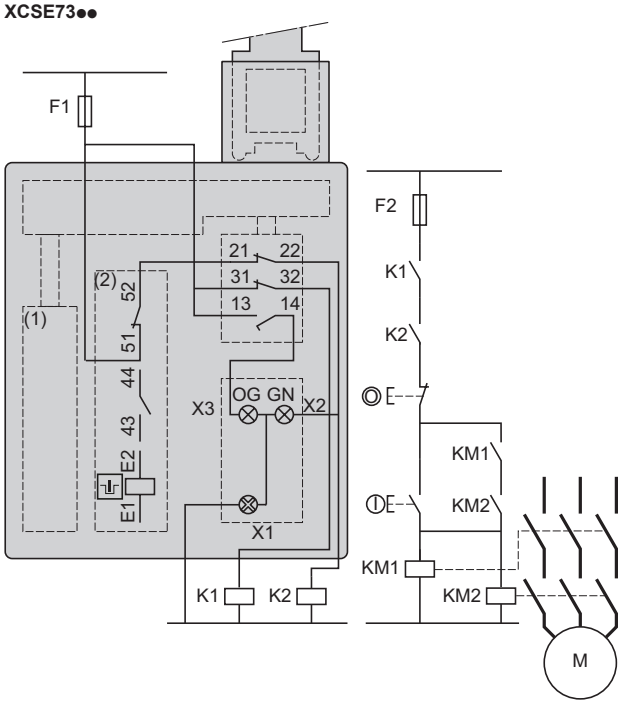

(1) Solenoid
(2) Auxiliary contact
E1-E2: Solenoid supply
21-22 and 31-32: Redundant safety contacts, key position monitoring
13-14: Safety contact, key position signaling
51-52: Solenoid position monitoring contact
43-44: Solenoid position signaling contact
13-X1: LED (orange): key withdrawn
51-X1: LED (green): key inserted and locked
21-52: Safety pre-wiring mandatory

Locking on de-energization, NC + NC + NO

XCSE73●●7

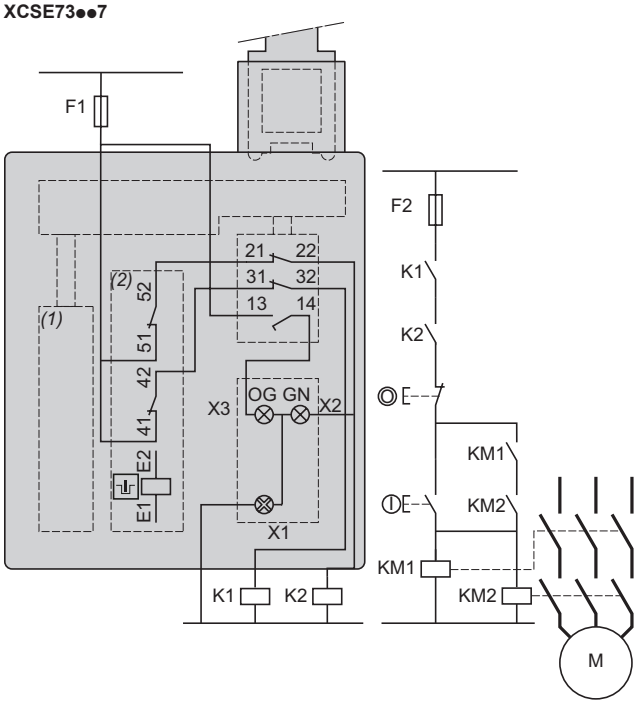

(1) Solenoid
(2) Auxiliary contact
E1-E2: Solenoid supply
21-22 and 31-32: Redundant safety contacts, key position monitoring
13-14: Safety contact, key position signaling
41-42 and 51-52: Redundant contacts, Solenoid position monitoring
13-X1: LED (orange): key withdrawn
51-X1: LED (green): key inserted and locked
21-52 and 42-31: Safety pre-wiring mandatory

References: page 70
Dimensions: page 71

Safety detection solutions
Safety interlock switches
Key-operated with solenoid, turret head
XCSE metal, 2 cable entries

Schemes (continued)

Contact states are represented with the actuating key inserted and the solenoid not energized.

Note: These schemes are given as examples only, the designer should refer to the relevant safety standards for guidance.

Wiring to PL=d, category 3 conforming to EN/ISO 13849-1
Wiring examples with redundancy for the safety interlock switch contacts, without monitoring or redundancy in the power circuit

Locking on energization, NC + NC + NO

XCSE75●●

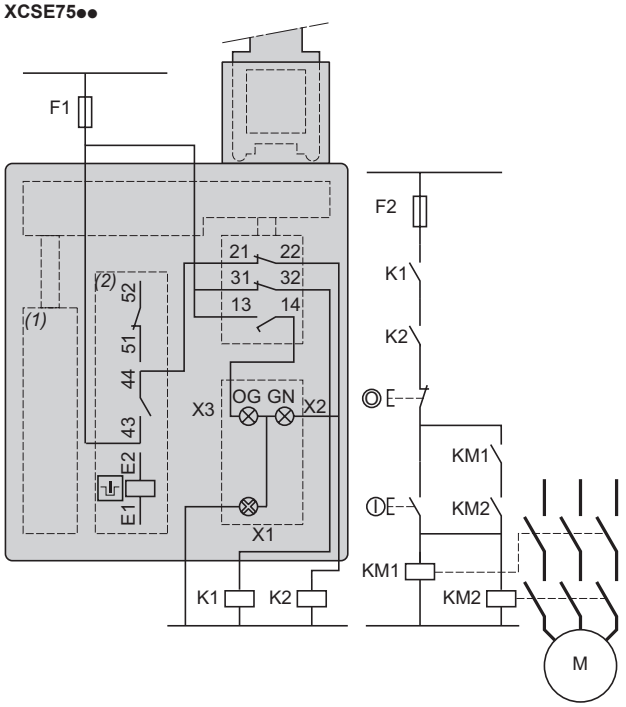

(1) Solenoid
(2) Auxiliary contact
E1-E2: Solenoid supply
21-22 and 31-32: Redundant safety contacts, key position monitoring
13-14: Safety contact, key position signaling
43-44: Solenoid position monitoring contact
51-52: Solenoid position signaling contact
13-X1: LED (orange): key withdrawn
43-X1: LED (green): key inserted and locked
21-44: Safety pre-wiring mandatory

Wiring to PL=e, category 4 conforming to EN/ISO 13849-1 and SIL 3 conforming to EN/IEC 61508. Wiring method used in conjunction with a control unit (The safety interlock switch should be used in conjunction with a safety limit switch to give electrical/ mechanical redundancy).

Method for machines with long rundown time (high inertia)

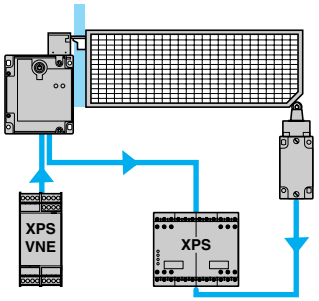

Interlocking device for actuating key fitted on guard and zero speed detection.

References:
page 70

Dimensions:
page 71

Safety detection solutions

Safety interlock switches

Key-operated with solenoid, turret head *(1)*
XCSTE plastic, 1 cable entry

Type of switch	Locking on de-energization and unlocking on energization of solenoid *(2)*		
	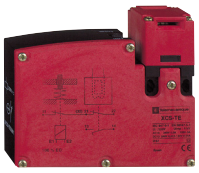		
Types of auxiliary contact actuated by the solenoid (locking contact). Contact state NC is to be considered with actuating key inserted and solenoid not energized.	24 V ⎓ or ∿ (50/60 Hz on ∿) 31 (32)	120 V ⎓ or ∿ (50/60 Hz on ∿) 31 (32)	230 V ⎓ or ∿ (50/60 Hz on ∿) 31 (32)

References of switches without actuating key *(3)* (⊖ NC contact with positive opening operation) with 1 cable entry tapped ISO M16 x 1.5

2-pole NO + NC break before make, slow break	13 21 14 22	**XCSTE5312** ⊖	**XCSTE5332** ⊖	**XCSTE5342** ⊖
2-pole NO + NC make before break, slow break	21 13 22 14	**XCSTE6312** ⊖	–	–
2-pole NC + NC slow break	11 21 12 22	**XCSTE7312** ⊖	–	**XCSTE7342** ⊖
Weight (kg)		0.360	0.360	0.360

References of switches with locking on energization and unlocking on de-energization

To order a Safety interlock switch with locking on energization and unlocking on de-energization of the solenoid, replace the second number **(3)** with **5**.
Example: XCSTE5312 becomes **XCSTE5512**. For these models, the auxiliary contact state is to be considered with key inserted and solenoid not energized and the contact terminals are identified 33 - (34) 33 —⁄— (34), Some references with locking on energization may not be available.

References of switches with 1 cable entry tapped Pg 11 or 1/2" NPT

To order a switch with 1 cable entry for Pg 11 cable gland, replace the last number **(2)** with **1** in the selected reference.
Example: XCSTE5312 becomes **XCSTE5311**.
To order a switch with 1 cable entry for 1/2" NPT conduit, replace the last number **(2)** with **3** in the selected reference.
Example: XCSTE5312 becomes **XCSTE5313**. The Pg 11 tapped entry is fitted with metal adapter DE9RA1012 for 1/2" NPT conduit.
Some Pg 13 and 1/2" NPT references may not be available.

Solenoid characteristics

Load factor	100%		
Rated operational voltage	24 V ⎓ or ∿ (50/60 Hz on ∿)	120 V ⎓ or ∿ (50/60 H on ∿)	230 V ⎓ or ∿ (50/60 Hz on ∿)
Voltage limits	- 15%, +10% of the rated operational voltage (including ripple on ⎓) conforming to EN/IEC 60947-1		
Service life	20,000 hours		
Consumption	10 VA max.		

(1) Head adjustable in 90° steps through 360°. Blanking plug for operating head slot included with switch.
(2) A special tool included with the safety interlock switch enables forced opening of the interlocking mechanism by authorized personnel, allowing withdrawal of the actuating key and subsequent opening of the NC safety contacts (auxiliary release).
(3) Actuating keys to be ordered separately (see page 79)

Other versions: please consult our Customer Care Center.

Dimensions:
page 77

Schemes:
page 78

Safety detection solutions

Safety interlock switches

Key-operated with solenoid, turret head *(1)*
XCSTE plastic, 1 cable entry

References of actuating keys and guard retaining device






Description	Straight key	Key with wide fixing *(2)*		Pivoting key	Right-angled key
For XCSTE safety interlock switches	**XCSZ11**	**XCSZ12**	**XCSZ15**	**XCSZ13**	**XCSZ14**
Weight (kg)	0.015	0.015	0.012	0.085	0.025

References of accessories

103047



XCSZ91

PIO000008910



XCSZ200

PF539550_A

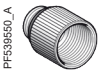

DE9RA1012

Description	For use with	Unit reference	Weight (kg)
Blanking plugs for operating head slot (Sold in lots of 10)	XCSTE	**XCSZ28**	0.050
Tool for forced opening of interlocking device (Sold in lots of 10)	XCSTE	**XCSZ100**	0.050
Padlocking device to help prevent insertion of key, for up to 3 padlocks (padlocks not included)	XCSTE	**XCSZ91**	0.053
Key centering device *(3)* (Fixing screws included)	XCSTE	**XCSZ200**	0.022
1/2" NPT conduit adapter (Sold in lots of 10)	XCSTE	**DE9RA1012**	0.048
M16 x 1.5 adapter (Sold in lots of 10)	XCSTE	**DE9RA1016**	0.048

(1) Head adjustable in 90° steps through 360°. Blanking plug for operating head slot included with switch.
(2) 2 key lengths, XCSZ12: L = 40 mm, XCSZ15: L = 29 mm.
(3) Not for use with XCSZ91.

Other versions: please consult our Customer Care Center.

Safety detection solutions
Safety interlock switches
Key-operated with solenoid, turret head
XCSTE plastic, 1 cable entry

Dimensions

Safety interlock switches
XCSTE●●●●

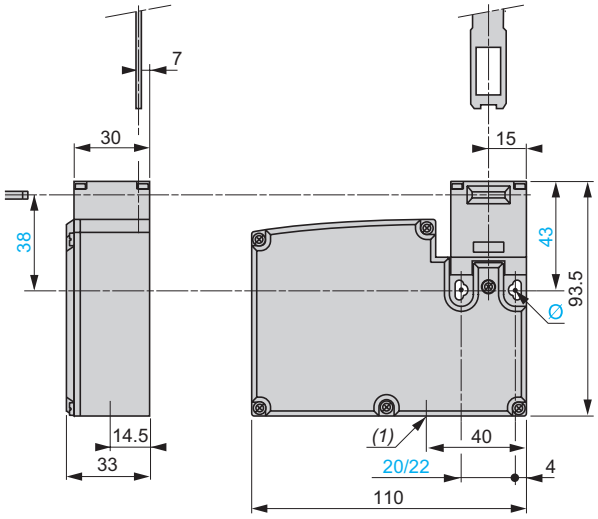

(1) 1 tapped entry for cable gland
Ø: 2 elongated holes Ø 4.3 x 8.3 on 22 centers, 2 holes Ø 4.3 on 20 centers

Actuating key centering device
XCSZ200

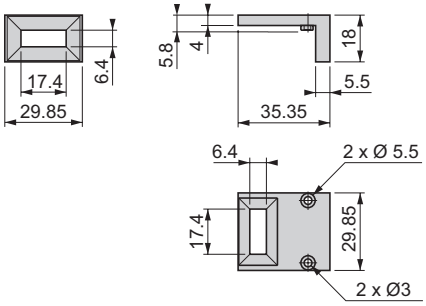

1/2" NPT conduit adapter
DE9RA1012

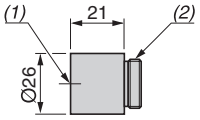

(1) Tapped entry for 1/2" NPT conduit
(2) Pg 11 threaded shank

M16 x 1.5 adapter
DE9RA1016

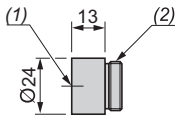

(1) M16 x 1.5 tapped entry
(2) Pg 11 threaded shank

Actuating keys
XCSZ11

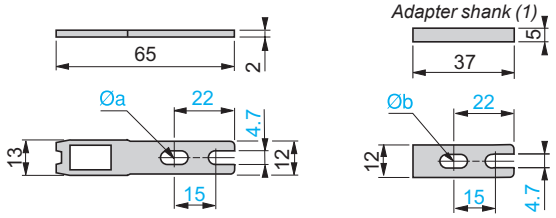

(1) Adapter (included with XCSZ11 actuating key) for replacing, without drilling an additional fixing hole, an XCKT safety interlock switch with XCKY01 actuating key by an XCSTA safety interlock switch with XCSZ11 actuating key.

Ø a: 2 elongated holes Ø 4.7 x 10
Ø b: 1 elongated hole for M4 or M4.5 screw

XCSZ12, XCSZ15

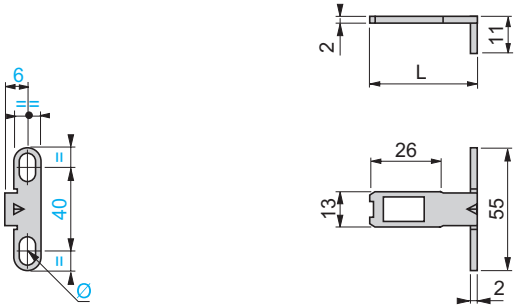

Ø: 2 elongated holes Ø 4.7 x 10
L = 40 mm (XCSZ12) or 29 mm (XCSZ15)

XCSZ13

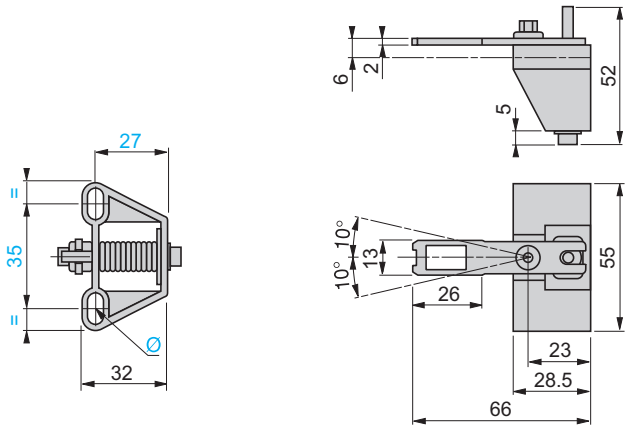

Ø: 2 elongated holes Ø 4.7 x 10

XCSZ14

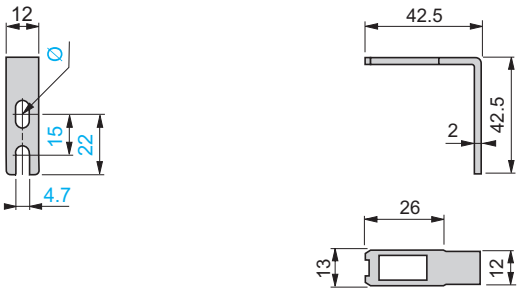

Ø: 1 elongated hole Ø 4.7 x 10

References:
page 76

Safety detection solutions
Safety interlock switches
Key-operated with solenoid, turret head
XCSTE plastic, 1 cable entry

Dimensions (continued)

Operating radius required for actuating key

XCSZ11

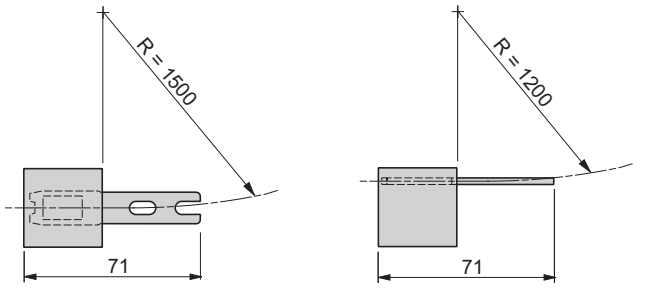

XCSZ12, XCSZ15

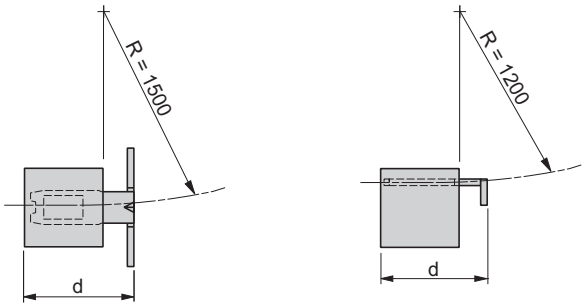

d = 46 mm (XCSZ12) or 35 mm (XCSZ15)

XCSZ13

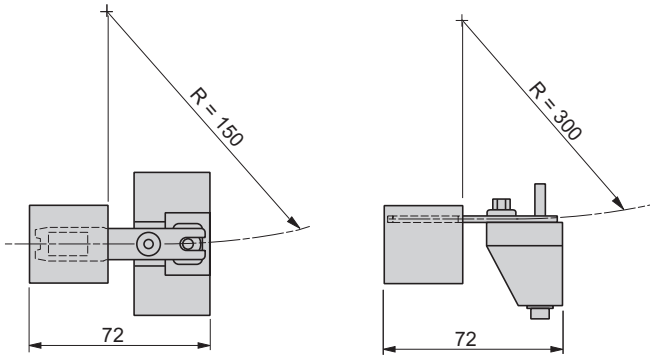

XCSZ14

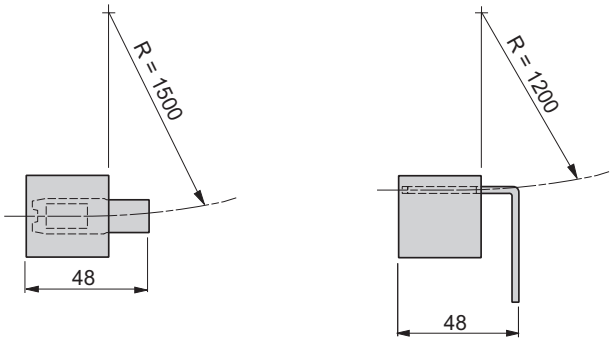

R = minimum radius

Setting-up

Functional diagrams

XCSTE5●●●

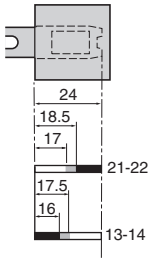

XCSTE6●●●

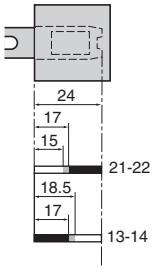

XCSTE7●●●

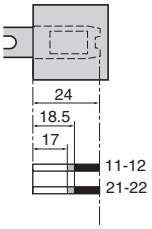

Contact operation

■ Closed ▭ Open ▭ Transient state

Safety detection solutions
Safety interlock switches
Key-operated with solenoid, turret head
XCSTE plastic, 1 cable entry

Schemes (continued)
Contact states are represented with the actuating key inserted and the solenoid not energized.
Note: These schemes are given as examples only, the designer should refer to the relevant safety standards for guidance.

Wiring to PL=d, category 3 conforming to EN/ISO 13849-1

Example with 2-pole NC + NO contact with mixed redundancy of the contacts and the associated control relays. To activate K1, it is necessary to remove and re-insert the actuating key when the supply is switched on.

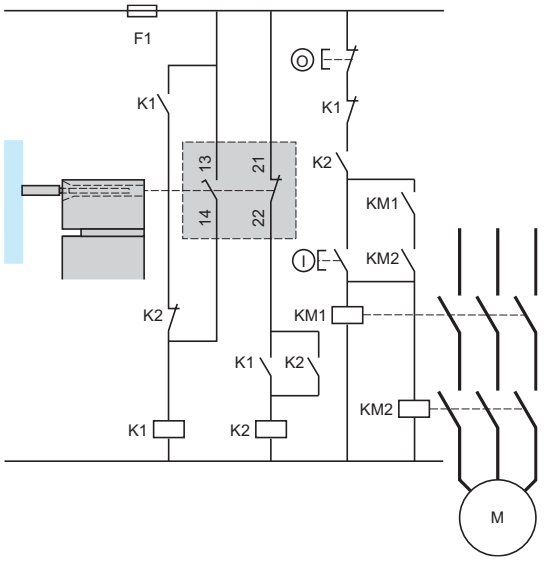

Wiring to PL=e, category 4 conforming to EN/ISO 13849-1 and SIL 3 conforming to EN/IEC 61508

(The safety interlock switch should be used in conjunction with a safety limit switch to give electrical/mechanical redundancy)

Method for machines with long rundown time (high inertia)

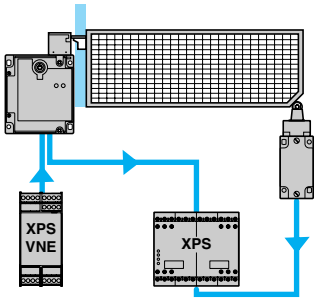

Interlocking device for actuating key fitted on guard and zero speed detection.

Wiring to PL=b, category 1 conforming to EN/ISO 13849-1

Wiring examples with protection fuse to help prevent shunting of the NC contact, due to either cable damage or tampering.

Locking on de-energization

NC + NO
XCSTE53●●

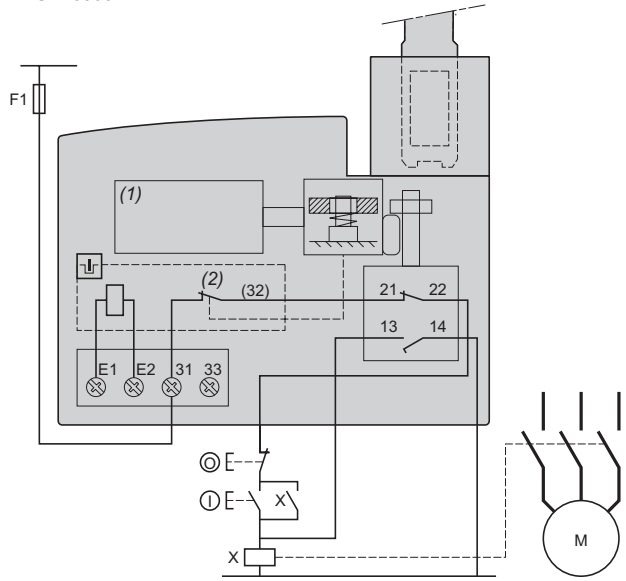

(1) Solenoid
(2) Auxiliary contact
E1-E2: Solenoid supply
13-14: Safety contact for detecting a possible shunt on 21-22 NC contact

Locking on energization

NC + NO
XCSTE55●●

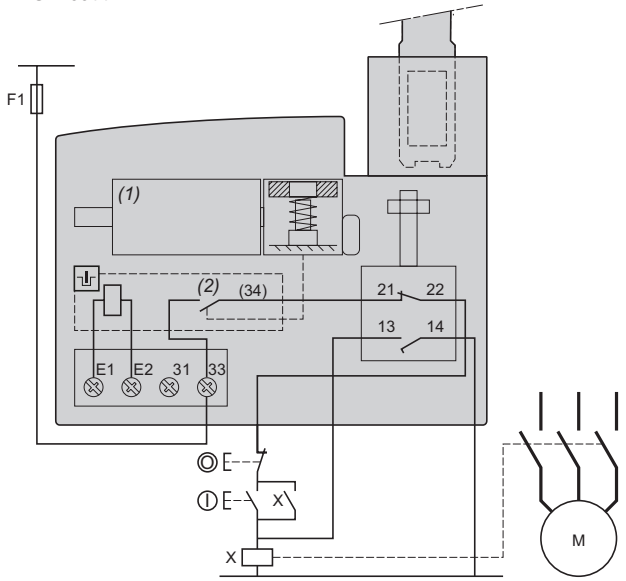

(1) Solenoid
(2) Auxiliary contact
E1-E2: Solenoid supply
13-14: Safety contact for detecting a possible shunt on 21-22 NC contact

Safety detection solutions
Safety interlock switches
Key-operated with solenoid, turret head
XCSTE plastic, 1 cable entry

Schemes (continued)
Contact states are represented with the actuating key inserted and the solenoid not energized.
Note: These schemes are given as examples only, the designer should refer to the relevant safety standards for guidance.

Wiring to PL=d, category 3 conforming to EN/ISO 13849-1
Wiring examples with redundancy for the safety interlock switch contacts, without monitoring or redundancy in the power circuit

Locking on de-energization

NC + NC
XCSTE73●●

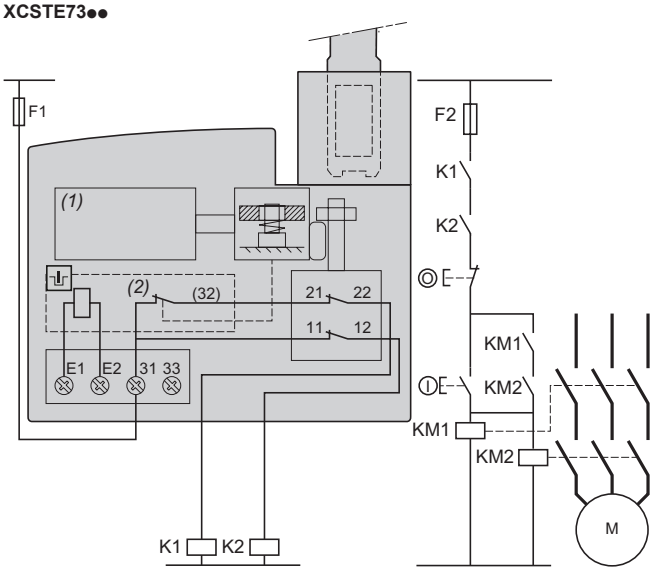

(1) Solenoid
(2) Solenoid auxiliary contact
E1-E2: Solenoid supply
21-22 and 11-12: Redundant Safety contacts: key position monitoring

Locking on energization

NC + NC
XCSTE75●●

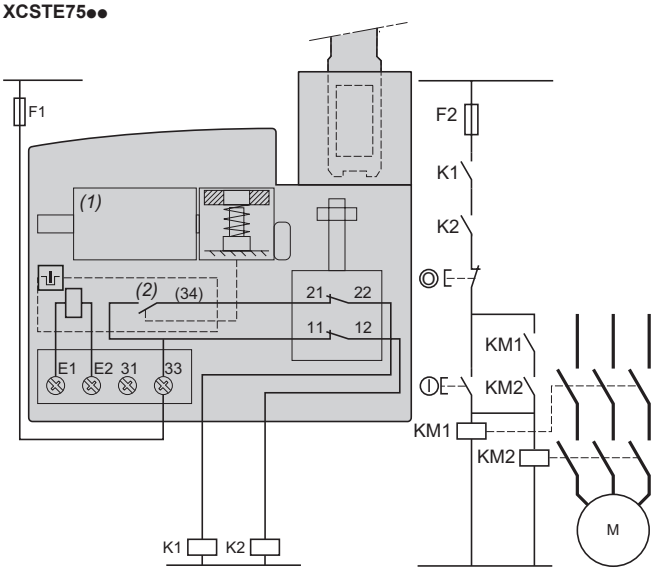

(1) Solenoid
(2) Solenoid auxiliary contact
E1-E2: Solenoid supply
21-22 and 11-12: Redundant Safety contacts: key position monitoring

Safety detection solutions

Contactless RFID safety switches

XCSR standalone, daisy-chain and single models

Unique code (high level coding)

ECOLAB Certified

Standalone models

- Unique code, high-level coding conforming to EN/ISO 14119
- 2 OSSD safety outputs
- Embedded EDM (external device monitoring)
- Manual or automatic start/restart depending on model
- Male 8-pin M12 connector
- IP 69K
- Numerous possible mounting configurations due to rotary transponder and symmetrical design
- Operation possible without safety control unit

Category 4/PL = e and SIL3

XCSRC11AM12 and XCSRC11MM12 Unique pairing *(1)*	**XCSRC31AM12 and XCSRC31MM12** Two new pairings possible *(2)*
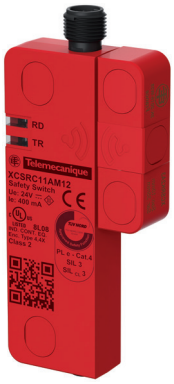	

Page 86

Daisy-chain models for series connection

- Unique code, high-level coding conforming to EN/ISO 14119
- Up to 20 switches can be connected in series without impacting the safety level
- 2 OSSD safety outputs
- 2 male 5-pin M12 connectors for direct series connection
- IP 69K
- Diagnosis of the whole chain of switches possible using the optional diagnostic module (see page 89)
- Numerous possible mounting configurations due to rotary transponder and symmetrical design

Category 4/PL = e and SIL3 (if combined with an appropriate safety control unit category 4/PL = e - SIL3)

XCSRC12M12 Unique pairing *(1)*	**XCSRC32M12** Two new pairings possible *(2)*
	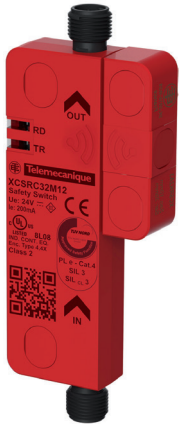

Page 87

Single models for point-to-point connections

- Unique code, high-level coding conforming to EN/ISO 14119
- Point-to-point connection to a safety controller or safety PLC
- 2 OSSD safety outputs
- Male 5-pin M12 connector
- IP 69K
- Numerous possible mounting configurations due to rotary transponder and symmetrical design

Category 4/PL = e and SIL3 (if combined with an appropriate safety control unit category 4/PL = e - SIL3)

XCSRC10M12 Unique pairing *(1)*	**XCSRC30M12** Two new pairings possible *(2)*
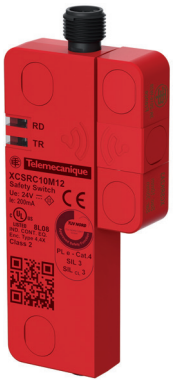	

Page 88

(1) The reader and transponder are supplied together, already factory-paired with a unique code.

(2) For these switches, the reader and transponder are supplied together, already factory-paired with a unique code. However, the reader can be re-paired (twice only) with a new (blank) transponder (see page 89). Once the new transponder has been paired, the previous transponder is no longer usable. A new blank transponder can only be paired once.

Safety detection solutions

Contactless RFID safety switches

XCSR standalone, daisy-chain and single models

Unique code (high level coding)

Type of contactless RFID switch		XCSRC●1AM12 and XCSRC●1MM12 standalone models	XCSRC12M12 and XCSRC32M12 daisy-chain models	XCSRC10M12 and XCSRC30M12 single models
Environment				
Conforming to standards		EN/ISO 14119 (High level of coding), EN/IEC 60947-5-2, EN/IEC 60947-5-3 UL 508 *(1)*, CSA C22.2 SIL 3 (IEC 61508), SILCL 3 (IEC 62061), PLe–Cat. 4 (EN ISO 13849-1)		
Product certifications		CE, cULus, TÜV, FCC, EAC, IC, RCM, E2, ECOLAB		
Maximum safety level *(2)*		SIL3 conforming to EN/IEC 61508, PL=e, category 4 conforming to EN/ISO 13849-1		
Ambient air temperature	For operation	-25...+70 °C		
	For storage	-40...+85 °C		
Vibration resistance	Conforming to EN/IEC 60068-2-6	10 gn (10…150 Hz)		
Shock resistance	Conforming to EN/IEC 60068-2-27	30 gn, 11 ms		
Protection against electric shock	Conforming to EN/IEC 61140	Class III		
Degree of protection	Conforming to EN/IEC 60529	IP 65, IP 66, IP 67		
	Conforming to DIN 40050	IP 69K		
Materials		Thermoplastic housing (Valox™)		
Characteristics				
Rated operating characteristics *(3)*		Ue: 24 V ⎓, -20%…+10%, Ie: ⎓ 60 mA (without load)		
Rated impulse withstand voltage (U imp)	Conforming to EN/IEC 60947-5-2	0.8 kV		
Integrated output protection		Short-circuit protection		
Connection	Conforming to EN/IEC 60947-5-2-A3 and EN/IEC 61076	M12 connector (A coding)		
Safety outputs 2 PNP NO OSSDs (output signal switching devices)	Maximum current	400 mA	200 mA	200 mA
Maximum switching frequency		0.5 Hz		
Delay	Power-on	< 5 s		
Typical response time (on transponder entry into operating zone)		250 ms	120 ms + 50 ms per additional switch	120 ms
Risk time (on transponder exit from operating zone)		< 120 ms	< 120 ms + 18 ms per additional switch	< 120 ms
Probability of dangerous failure per hour PFH_D	Conforming to EN/ISO13849-1 and EN/IEC 62061	5×10^{-10}		
Tightening torque	M4 retaining screw	1.5 N.m/*13 lb-in*		
	M12 connectors	1 N.m/*0.88 lb-in*		
Mission time (TM)		20 years		
RFID protocol		Based on ISO 15693		
Functions				
Functions		- Operation possible without safety control unit - Manual monitored or automatic restart depending on model - External device monitoring (EDM)	- Integrated series connections - Connection to a safety interface (safety relay, for example) - Series diagnostics (with XCSRD210MDB diagnostic module)	- Point-to-point connection to a safety interface (safety controller or safety PLC, for example)

(1) The switch safety function has been assessed by TüV Nord, not by UL.
(2) With an appropriate, correctly connected safety control system for daisy-chain and single models.
(3) Use a safety extra-low voltage (SELV) or protected extra-low voltage (PELV) power supply.

Safety detection solutions

Contactless RFID safety switches
XCSR standalone model
Unique code (high level coding)

Type	Standalone contactless RFID safety switches
	Connection via M12 connector

ECOLAB®
Certified

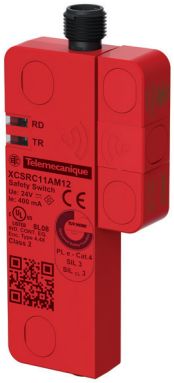



References

Composition	Functions	Unique pairing	Two new pairings possible	Weight (kg)
■ Reader ■ Multiposition sensor transponder ■ Transponder and reader factory paired ■ 4 blanking plugs ■ Quick Start Guide ■ EU declaration of conformity	EDM, automatic restart	**XCSRC11AM12**	**XCSRC31AM12**	0.100
	EDM, monitored manual restart *(1)*	**XCSRC11MM12**	**XCSRC31MM12**	0.100

Detection characteristics *(2)*

Typical operating sensing distance (for detection of transponder presence)	15 mm
Assured operating sensing distance	Sao: 10 mm
Typical release sensing distance (for detection of transponder absence)	18 mm
Assured release distance	Sar: 35 mm
Repeat accuracy	⩽ 10% x Sr
Hysteresis	3% x Sr ⩽ H ⩽ 20% x Sr (Sr: real sensing distance)

Output states

Output states shown are with the dedicated transponder positioned in front of the reader.

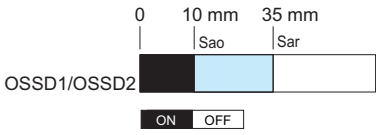

Outputs closed
Outputs open
Transient state

Sao: Assured operating sensing distance
Sar: Assured release distance
Conforming to EN/IEC 60947-5-3

Connections

8-pin M12 connector

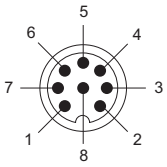

1 + 24 V ⎓
2 OSSD2
3 0 V ⎓
4 OSSD1
5 EDM_ST_1
6 EDM_ST_2
7 NC (not connected)
8 NC (not connected)

(1) The start command is effective after the operator has pressed and released the start button.
(2) These values are given for a face-to-face mounting configuration of the reader and transponder on a non-magnetic support, without misalignment between the transponder and the reader, and at an ambient temperature between +20 and +25 °C.

Safety detection solutions

Contactless RFID safety switches
XCSR daisy-chain model
Unique code (high level coding)

Type	Daisy-chain contactless RFID safety switches
	Connection via M12 connectors

ECOLAB®
Certified





References

Composition	Unique pairing	Two new pairings possible	Weight (kg)
■ Reader ■ Multiposition sensor transponder ■ Transponder and reader factory-paired ■ 4 blanking plugs ■ Quick Start Guide ■ EU declaration of conformity	**XCSRC12M12**	**XCSRC32M12**	0.100

Detection characteristics *(1)*

Typical operating sensing distance (for detection of transponder presence)	15 mm
Assured operating sensing distance	Sao: 10 mm
Typical release sensing distance (for detection of transponder absence)	18 mm
Assured release distance	Sar: 35 mm
Repeat accuracy	≤ 10% x Sr
Hysteresis	3% x Sr ≤ H ≤ 20% x Sr (Sr: real sensing distance)

Output states

Output states shown are with the dedicated transponder positioned in front of the reader.

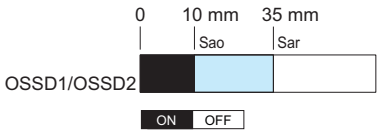

Outputs closed
Outputs open
Transient state

Sao: Assured operating sensing distance
Sar: Assured release distance
Conforming to EN/IEC 60947-5-3

Connections

2 x 5-pin M12 connectors

Output connector



1 + 24 V ⎓
2 OSSD2 (O2)
3 0 V ⎓
4 OSSD1 (O1)
5 Diagnosis Out (Do)

Input connector

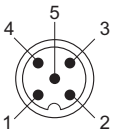

1 + 24 V ⎓
2 INPUT 2 (I2)
3 0 V ⎓
4 INPUT 1 (I1)
5 Diagnosis In (Di)

(1) These values are given for a face-to-face mounting configuration of the reader and transponder on a non-magnetic support, without misalignment between the transponder and the reader, and at an ambient temperature between +20 and +25 °C.

Safety detection solutions

Contactless RFID safety switches
XCSR single model
Unique code (high level coding)

Type	Single contactless RFID safety switches
	Connection via M12 connector

ECOLAB®
Certified



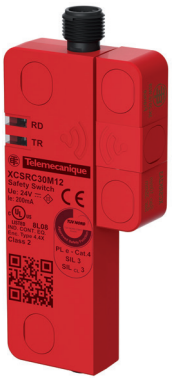

References

Composition	Unique pairing	Two new pairings possible	Weight (kg)
■ Reader ■ Multiposition sensor transponder ■ Transponder and reader factory-paired ■ 4 blanking plugs ■ Quick Start Guide ■ EU declaration of conformity	**XCSRC10M12**	**XCSRC30M12**	0.100

Detection characteristics *(1)*

Typical operating sensing distance (for detection of transponder presence)	15 mm
Assured operating sensing distance	Sao: 10 mm
Typical release sensing distance (for detection of transponder absence)	18 mm
Assured release distance	Sar: 35 mm
Repeat accuracy	≤ 10% x Sr
Hysteresis	3% x Sr ≤ H ≤ 20% x Sr (Sr: real sensing distance)

Output states

Output states shown are with the dedicated transponder positioned in front of the reader.

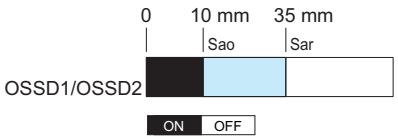

Outputs closed
Outputs open
Transient state

Sao: Assured operating sensing distance
Sar: Assured release distance
Conforming to EN/IEC 60947-5-3

Connections

5-pin M12 connector

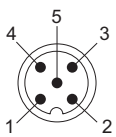

1 + 24 V ⎓
2 OSSD2
3 0 V ⎓
4 OSSD1
5 NC (not connected)

(1) These values are given for a face-to-face mounting configuration of the reader and transponder on a non-magnetic support, without misalignment between the transponder and the reader, and at an ambient temperature between +20 and +25 °C.

Safety detection solutions

Contactless RFID safety switches

Accessories

XCS_616_CPSCT16004



XCSRD210MDB

XCS_616_CPSCT16004



XCSRK2A3

XCS_616_CPSCT16005



XCSRZE

XCS_616_CPSCT16016



XCSRZSRC1



XCSRZSTK1

Diagnostic module for daisy-chain RFID safety switches

The **XCSRD210MDB** module interprets the diagnostic data from the whole chain of switches and makes this information available in Modbus registers.
There are two RJ45 Modbus communication connectors available for connecting external peripheral devices (such as an HMI terminal, for example).

Main characteristics of the diagnostic function:
- It provides the state of all the **XCSRC●M12** switches monitored by the safety chain.
- It identifies which protection devices are open or closed.
- It helps to prevent a restart of the machine if the chain has been unintentionally or deliberately tampered with; if an error has been detected on any of the safety switches; or if any of the wiring becomes disconnected.
- It detects if the **XCSRZE** loopback device is not connected and helps to prevent restarting until the loopback device has been reconnected and a new power cycle completed.

Description	For RFID safety switches	Reference	Weight (kg)
■ Modbus RTU ■ 2 RJ45 outputs ■ 2 LEDs ■ 1 volt-free contact representative of the state of the chain	XCSRC12M12, XCSRC32M12	**XCSRD210MDB**	0.100

Loopback device for daisy-chain RFID safety switches

Description	For RFID safety switches	Reference	Weight (kg)
M12 connector	XCSRC12M12, XCSRC32M12	**XCSRZE**	0.020

Blank transponder for new pairing

Composition	For RFID safety switches	Reference	Weight (kg)
■ Blank transponder ■ 2 blanking plugs	XCSRC30M12, XCSRC31AM12, XCSRC31MM12, XCSRC32M12	**XCSRK2A3**	0.020

Mounting accessories

Description	For use with	Reference	Weight (kg)
Mounting supports (supplied with 2 one-way screws, Ø 4 x 12 mm, for mounting the safety switch on the support)	Reader	**XCSRZSRC1**	0.150
	Transponder	**XCSRZSTK1**	0.050

Description	Length mm	Reference	Weight (kg)
One-way screws for mounting Ø 4 mm safety switches (pack of 10 screws)	14	**XCSZ71**	0.020
	35	**XCSZ72**	0.020

Characteristics

Cable type		XZCP29P12L●● XZCP29P12L●●	XZCR1111064D●●	XZCP11V12L●● XZCP11V12L●●
Connection type		Screw thread (metal clamping ring)		
Number of contacts		8	5	
Degree of protection		IP 65, IP 67, and IP 69K (with clamping ring correctly tightened)		
Ambient air temperature	Operation	-25...+70 °C		
	Storage	-40…+85 °C		
Connection	Conforming to EN/IEC 60947-5-2	PUR cable, Ø 6.4 mm, wire c.s.a.: 8 x 0.34 mm²	PUR cable, Ø 5 mm, wire c.s.a.: 5 x 0.34 mm²	
Nominal current		2 A		
Insulation resistance		> 10^9 Ω		
Contact resistance		≤ 5 mΩ		

References

F19_ACC_CPFJR16052



XZCP29P12L●●

F19_ACC_CPFJR16053



XZCP29P12L●●

F19_ACC_CPFJR16056



XZCR1111064D●●

F19_ACC_CPFJR16049



XZCP11V12L●●

F19_ACC_CPFJR16050



XZCP11V12L●●

Description	Pins	For use with	Type	Length m	Reference	Weight (kg)
Pre-wired connectors for standalone RFID safety switches						
Pre-wired connectors with female M12 connector (A coding)	8	XCSRC11AM12, XCSRC31AM12, XCSRC11MM12, XCSRC31MM12	Straight	2	**XZCP29P12L2**	0.010
				5	**XZCP29P12L5**	0.250
				10	**XZCP29P12L10**	0.500
				20	**XZCP29P12L20**	1.000
			Elbowed	2	**XZCP53P12L2**	0.010
				5	**XZCP53P12L5**	0.250
				10	**XZCP53P12L10**	0.500
				20	**XZCP53P12L20**	1.000
Jumper cables for daisy-chain RFID safety switches						
Jumper cables with 2 female M12 connectors (A coding)	5	XCSRC12M12, XCSRC32M12	Straight	0.3	**XZCR1111064D03**	0.060
				3	**XZCR1111064D3**	0.180
				5	**XZCR1111064D5**	0.300
				10	**XZCR1111064D10**	0.600
				25	**XZCR1111064D25**	1.500
Pre-wired connectors for daisy-chain and single RFID safety switches *(1)*						
Pre-wired connectors with female M12 connector (A coding)	5	XCSRC10M12, XCSRC30M12, XCSRC12M12, XCSRC32M12	Straight	2	**XZCP11V12L2**	0.010
				5	**XZCP11V12L5**	0.250
				10	**XZCP11V12L10**	0.500
				20	**XZCP11V12L20**	1.000
			Elbowed	2	**XZCP12V12L2**	0.010
				5	**XZCP12V12L5**	0.250
				10	**XZCP12V12L10**	0.500
				20	**XZCP12V12L20**	1.000

(1) For connecting the last switch in the chain (XCSRC12M12 or XCSRC32M12) to the safety control unit.

Safety detection solutions

Contactless RFID safety switches

XCSR standalone, daisy-chain and single models

Safety switches

Reader with connection via M12 connector

XCSRC●0M12, XCSRC●1AM12 and XCSRC●1MM12

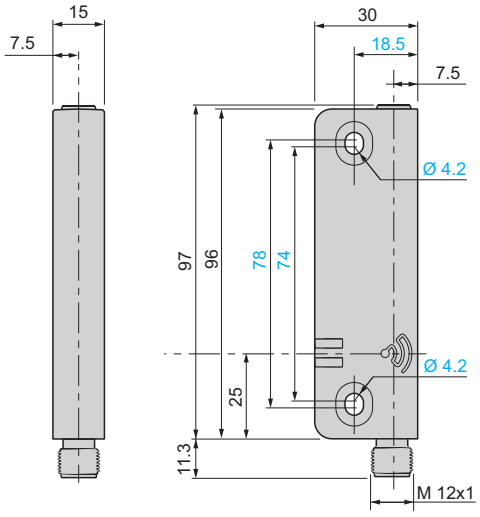

Reader with connection via 2 x M12 connectors

XCSRC●2M12

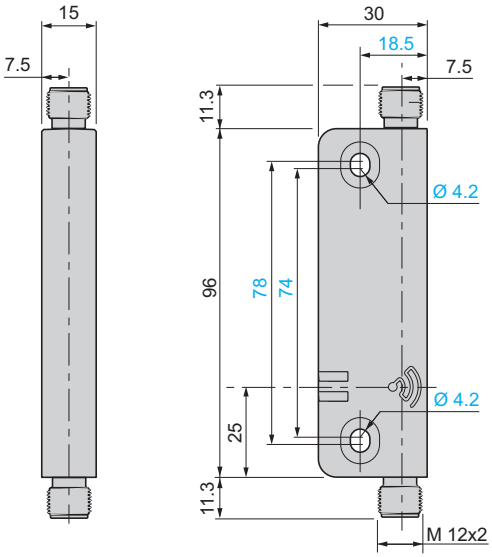

Transponder

XCSRK2A3

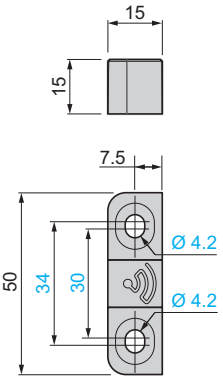

Accessories

Mounting support for reader

XCSRZSRC1

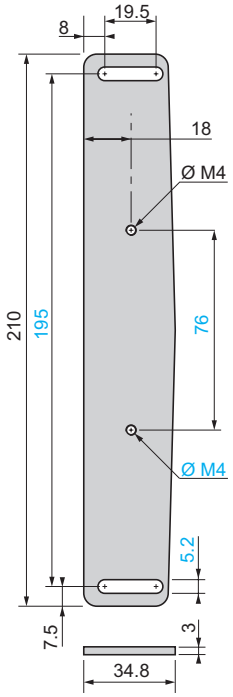

Mounting support for transponder

XCSRZSTK1

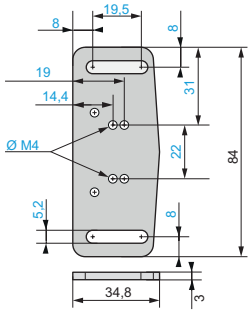

Diagnostic module

XCSRD210MDB

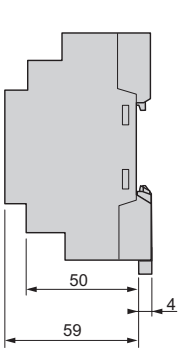

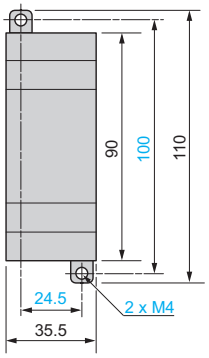

Loopback device

XCSRZE

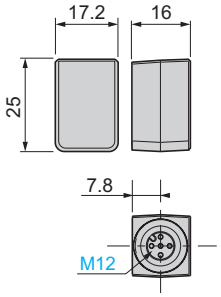

Safety detection solutions
Contactless RFID safety switches
XCSR standalone, daisy-chain and single models

Mounting

Examples of face-to-face mounting configurations (recommended)

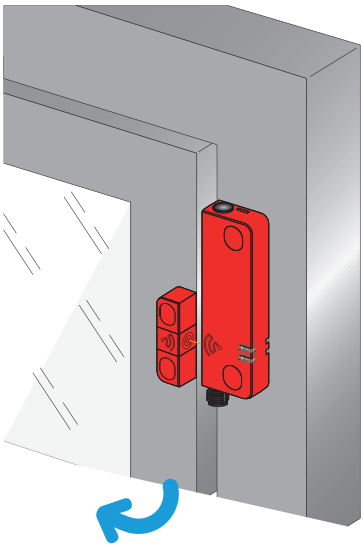

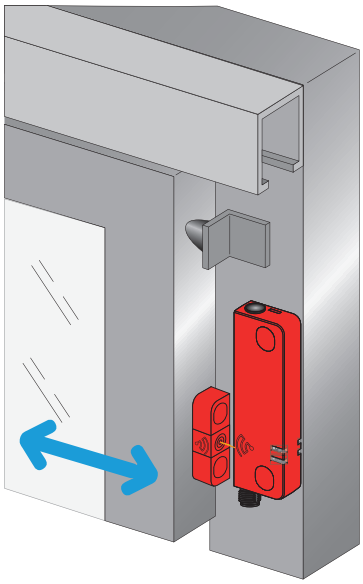

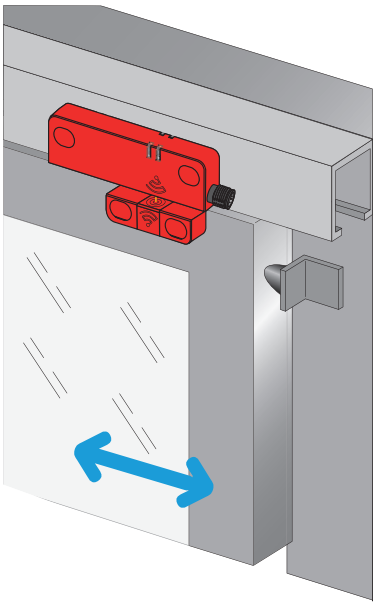

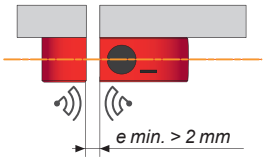

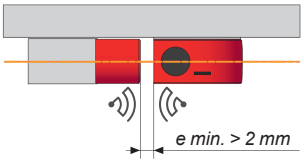

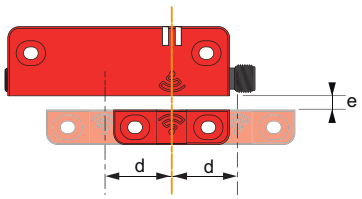

e: minimum recommended mounting distance between reader and transponder

e min. > 2 mm
d: detection limit

Example of side-by-side mounting

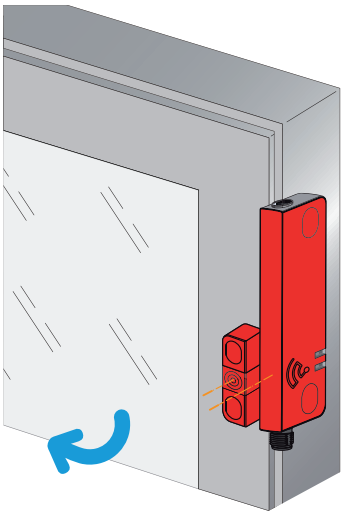

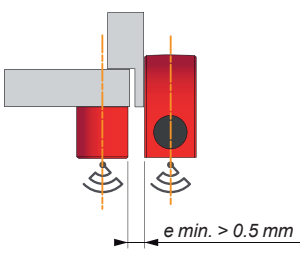

e: minimum recommended mounting distance between reader and transponder

Minimum mounting distances between safety switches

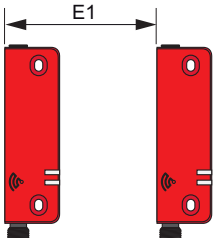

E1 min. = 120 mm



E2 min. = 160 mm

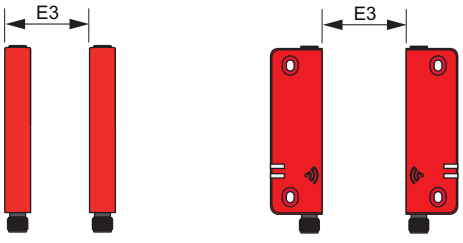

E3 min. = 120 mm

Safety detection solutions

Contactless RFID safety switches

XCSR standalone, daisy-chain and single models

Detection curves

Face-to-face mounting (recommended configuration)

Sao and Sar sensing distances along Y axis as a function of Z
Longitudinal misalignment for X = 0

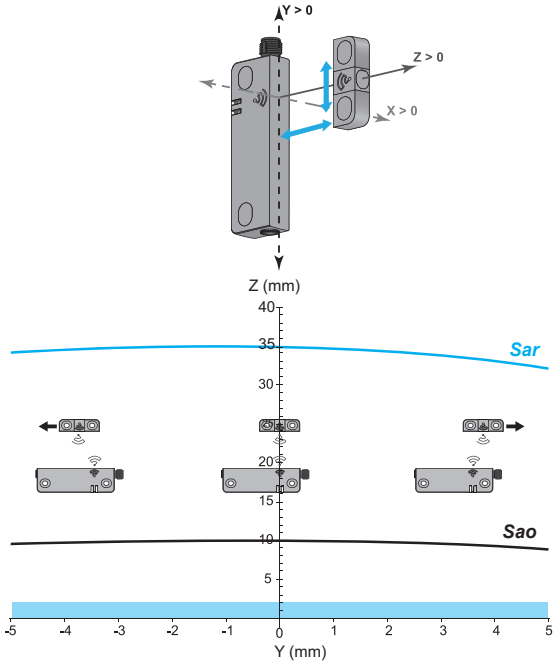

Sao and Sar sensing distances along X axis as a function of Z
Transverse misalignment for Y = 0

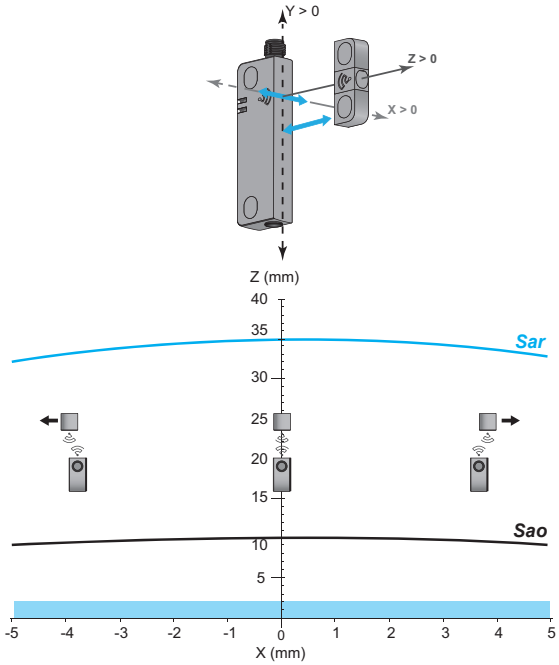

Side-by-side mounting

Sao and Sar sensing distances along Y axis as a function of X
Longitudinal misalignment for Z = 0

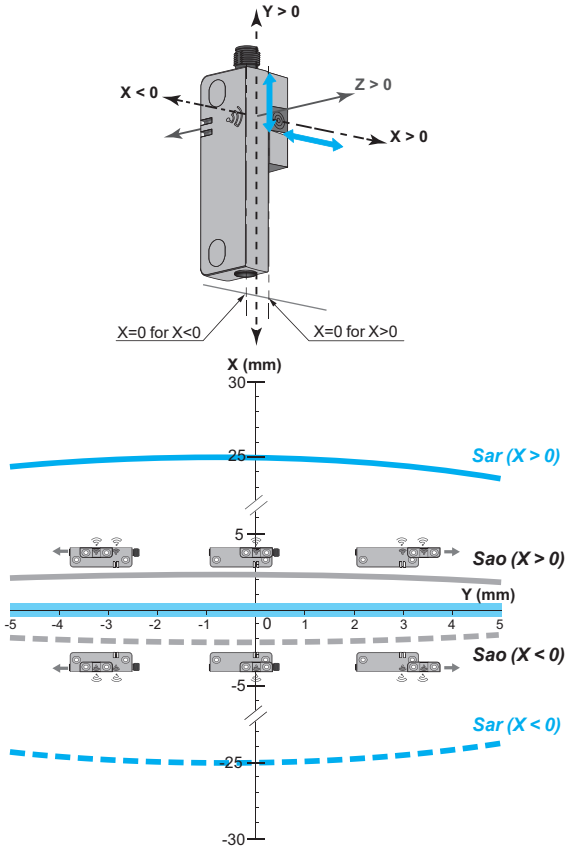

Sao and Sar sensing distances along Z axis as a function of X
Transverse misalignment for Y = 0

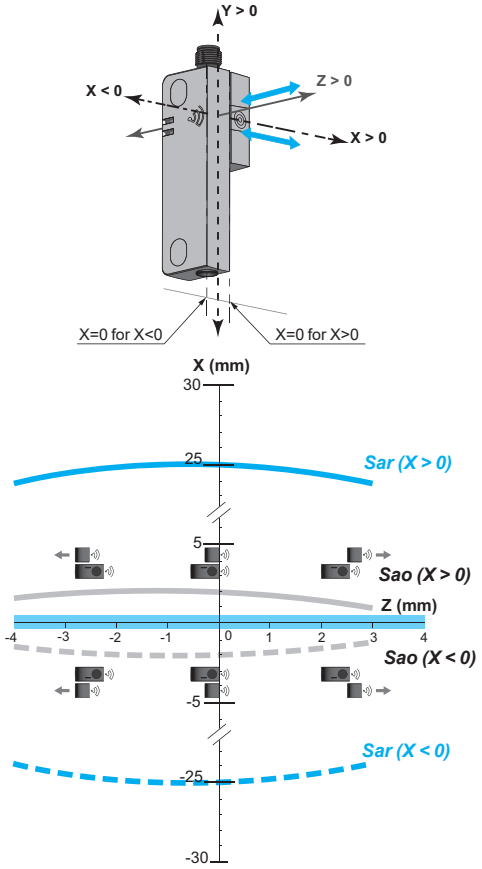

Sao: Assured operating sensing distance
Sar: Assured release distance

: *e: minimum recommended mounting distance between reader and transponder*

Safety detection solutions

Contactless RFID safety switches

XCSR standalone, daisy-chain and single models

Schemes Note: these schemes are given as examples only, the designer should refer to the relevant safety standards for guidance.

Standalone contactless RFID safety switches: XCSRC11AM12, XCSRC11MM12, XCSRC31AM12 and XCSRC31MM12

Example of Category 4/PL = e/SIL 3 connection, with monitored start *(1)* and monitoring loop for contactors (EDM)

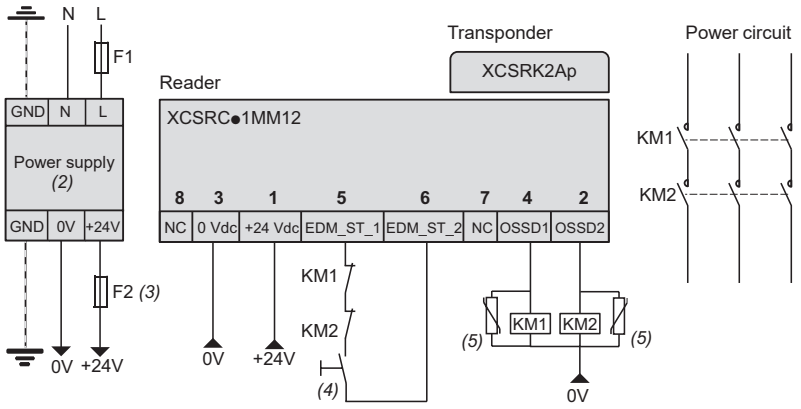

Cables: XZCP29P12L•• or XZCP53P12L ••
1 (BN/Brown): + 24 V ⎓
2 (WH/White): OSSD2
3 (BU/Blue): 0 V ⎓
4 (BK/Black): OSSD1
5 (GY/Gray): EDM_ST_1
6 (PK/Pink): EDM_ST_2
7 (VT/Violet): not connected
8 (OR/Orange): not connected

(1) The restart command is effective after the operator has pressed and released the restart button. See Note (4).
(2) The power supply should meet the requirements of standard IEC 60204-1 relating to safety extra-low voltage (SELV) or protected extra-low voltage (PELV) power supplies.
(3) 1 A max.
(4) Restart button.
(5) The use of arc suppressors is recommended for KM1 and KM2.

Daisy-chain contactless RFID safety switches: XCSRC12M12 and XCSRC32M12

Example of Category 4/PL = e/SIL 3 series connection to an XPSUAF•TE

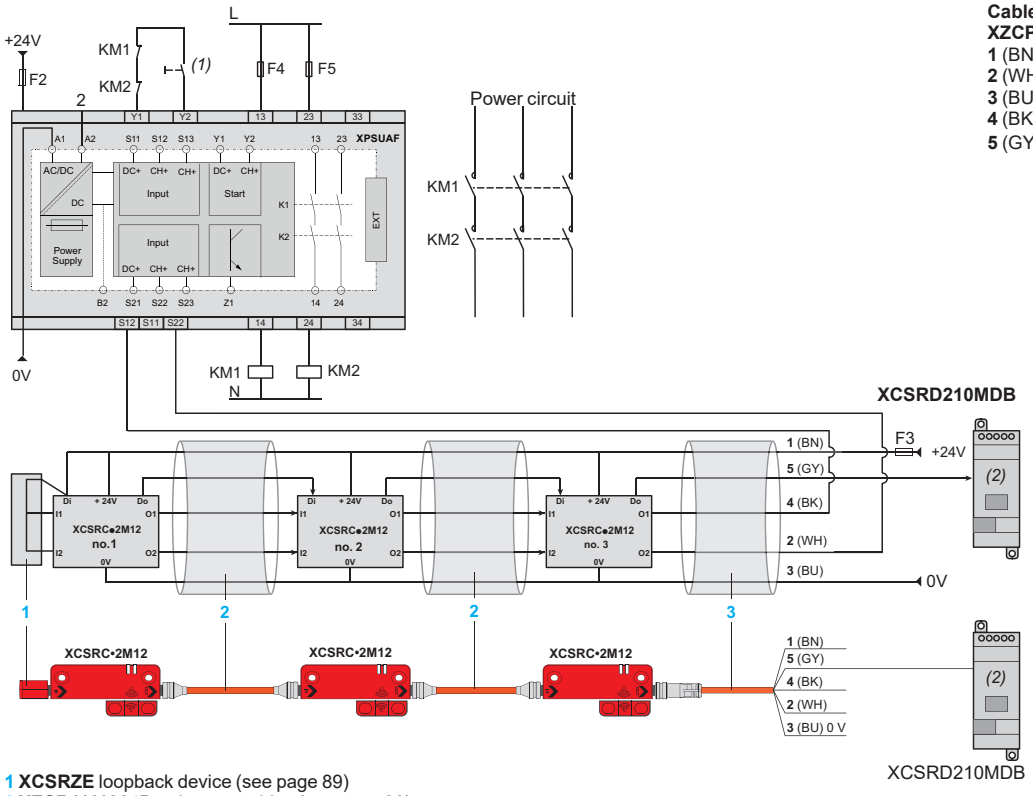

1 XCSRZE loopback device (see page 89)
2 XZCR1111064D•• jumper cables (see page 90)
3 XZCP11V12L•• or **XZCP12V12L••** pre-wired connectors (see page 90)

A1, A2 Power supply
Y1 Control output (DC+) of start input
Y2 Input channel (CH+) of start input
S11, S21 Control outputs (DC+) of safety-related inputs
S12, S13, S22, S23 Input channels (CH+) of safety-related inputs

Cables: XZCP11V12L•• or XZCP12V12L••
1 (BN/Brown): + 24 V ⎓
2 (WH/White): OSSD2
3 (BU/Blue): 0 V ⎓
4 (BK/Black): OSSD1
5 (GY/Gray): diagnostics

*(1) The start function is configured by means of the **XPSUAF•TE** start function selector.*
*(2) The diagnostic module (XCSRD210MDB), every **XCSRC•2M12** switch, and the **XPSUAF•TE** safety control unit should all be powered by the same power supply.*

Single contactless RFID safety switches: XCSRC10M12 and XCSRC30M12

Example of Category 4/PL = e/SIL 3 connection to an XPSMCMCP0802 safety controller

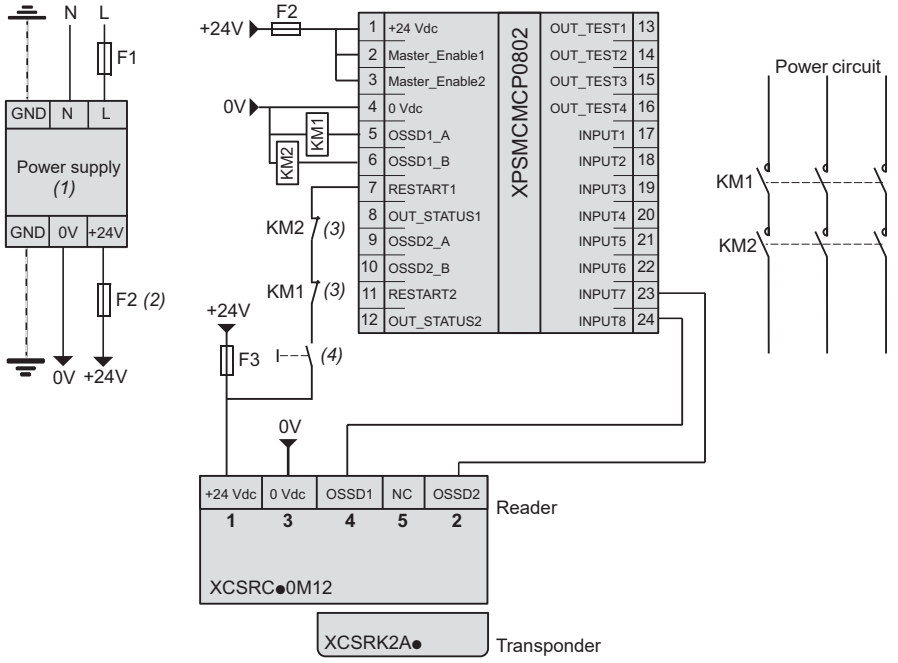

Cables: XZCP11V12L●● or XZCP12V12L ●●
1 (BN/Brown): + 24 V ⎓
2 (WH/White): OSSD2
3 (BU/Blue): 0 V ⎓
4 (BK/Black): OSSD1
5 (GY/Gray): not connected

(1) The power supply should meet the requirements of standard IEC 60204-1 relating to safety extra-low voltage (SELV) or protected extra-low voltage (PELV) power supplies.
(2) 1 A max.
(3) Monitoring of contactors (EDM: external device monitoring).
(4) Restart button.

Safety detection solutions

Contactless RFID safety switches

XCSRM miniature format

Single model (5-pin) and advanced model (8-pin)

ECOLAB Certified

Single model: standalone, high level coding

- Pre-cabled, pigtail, or connector
- Unique code, high-level coding conforming to EN/ISO 14119
- Automatic pairing process for the 2 additional devices
- 2 OSSD safety outputs (PNP)
- Point-to-point connection to a safety control unit
- Automatic start/restart without EDM

Category 4/PL = e, SIL3, SILCL3

XCSRM10L●●, XCSRM10●●M12
Unique pairing *(1)*

XCSRM30L●●, XCSRM30●●M12
Two new pairings possible *(2)*

The switches are available with pre-cabled, M12 connector, and pigtail connection format.



Page 98

Single model: standalone, generic coding

- Pre-cabled, pigtail, or connector
- Low-level coding
- For point-to-point connections
- 2 OSSD safety outputs (PNP)
- Can dialog directly to switch without pairing

Category 4/PL = e, SIL3, SILCL3

XCSRML0L●●●, XCSRML0M12, XCSRML0L01M12,
Generic coded

The switches are available with pre-cabled, M12 connector, and pigtail connection format.



Page 98

Advanced model: daisy-chain and External Device Monitoring (EDM)

- 2 OSSD safety outputs (PNP) and 2 OSSD safety inputs
- External Device Monitoring (EDM)
- Unique or unlimited pairing available
- Up to 16 switches can be connected in series
- Automatic pairing process for the unlimited pairing model

Category 4/PL = e, SIL3, SILCL3

XCSRM13M12 and XCSRM13L01M12
Unique coded

XCSRMU3M12 and XCSRMU3L01M12
Unlimited pairing possible

The switches are available with M12 connector and pigtail connection format.



Page 99

(1) The switch and actuator are supplied together, already factory-paired with a unique code.

(2) For these switches, the reader and actuator are supplied together, already factory-paired with a unique code. However, the reader can be re-paired (twice only) with a new (blank) actuator (see page 100). Once the new actuator has been paired, the previous actuator is no longer usable. A new blank actuator can only be paired once.

Safety detection solutions

Contactless RFID safety switches

XCSRM miniature format

Single model (5-pin) and advanced model (8-pin)

Type of contactless RFID switch			XCSRM10L●●, XCSRM10●●M12, XCSRM30L●●, XCSRM30●●M12, XCSRML0L●●●, XCSRML0M12, XCSRML0L01M12	XCSRM●3M12, XCSRM●3L●●M12
Environment				
Conforming to standards			EN IEC 60947-5-2, EN IEC 60947-5-3, EN ISO 13849-1, IEC 61508, EN IEC 62061, EN ISO 14119, UL 508, CSA C22.2 N°14	
Product certifications			Tüv, cULus, FCC, IC, UKCA, ECOLAB	
Maximum safety level *(2)*			SIL3 conforming to IEC 61508, SILCL3 conforming to IEC 62061, and PL=e, category 4 conforming to EN/ISO 13849-1 *(1)*	
Ambient air temperature	For operation		-25…+70°C	
	For storage		-25…+70°C	
Vibration resistance	Conforming to EN/IEC 60068-2-6		± 1 mm amplitude (10 .. 55Hz), 5 min	
Shock resistance	Conforming to EN/IEC 60068-2-27		30 gn, impulse duration 11 ms, in all 3 axes	
Protection against electric shock	Conforming to EN/IEC 61140		Class III	
Degree of protection	Conforming to EN/IEC 60529		IP65, IP67 conforming to IEC 60529, conforming to DIN 40050	
	Conforming to DIN 40050		IP69K (except M12 connector and pigtail)	
Materials	Housing		Nylon (PK)	
	Cable		PVC	
Characteristics				
Rated impulse withstand voltage (U imp)	Conforming to EN/IEC 60947-5-2		1 kV	
Integrated output protection			Short Circuit protection conforming to EN/IEC 60947-5-3	
Connection	Conforming to EN/IEC 60947-5-2-A3 and EN/IEC 61076		M12 connector (A coding)	
Safety outputs 2 PNP NO OSSDs (output signal switching devices)	Maximum current		300 mA	
Maximum switching frequency			1 Hz	
Delay	Power-on		10 s, 15 s Max	
Maximum response time (on transponder entry into operating zone)			≤ 250 ms	
Risk time (on transponder exit from operating zone)			Tr < 55 ms , addition of 12 ms per switch in Daisy-Chain	
Probability of dangerous failure per hour PFH_D	Conforming to EN/ISO13849-1 and EN/IEC 62061		2.62×10^{-9} Per reader	
Tightening torque	M4 retaining screw	Switch	0.8 - 1.5 Nm	
		Actuator	0.8 - 1.2 Nm	
	M12 connectors		0.8 Nm	
Mission time (TM)			20 years	
RFID protocol			Low Frequency based on ISO/IEC 18000-2	
Functions				
Functions			Automatic start/restart without EDM Point-to-point connection to a safety control unit State (PNP) output to Non Safety control unit (PLC) LED indicators for status and diagnosis	Automatic start/restart with or without EDM Manual start/restart with or without EDM Series connection (daisy-chain) Point-to-point connection to a safety control unit Diagnostic output to Non Safety control unit (PLC) LED indicators for status and diagnosis

(1) With an appropriate, correctly connected safety control system for daisy-chain and single models.

Safety detection solutions

Contactless RFID safety switches

XCSRM miniature format

Single model, 5-pin connector

Type	**Single miniature contactless RFID safety switches**		
Connection	**M12 connector**	**Pre-cabled (5 wires)**	**Pigtail M12 connector**

ECOLAB®
Certified



References

Composition		Unique pairing	Two new pairings possible	Generic coded	Weight (kg)
■ Switch ■ Actuator ■ Actuator and switch factory paired ■ 6 blanking plugs ■ Quick Start Guide ■ EU and UKCA declaration of conformity	2 m cable	**XCSRM10L02**	**XCSRM30L02**	**XCSRML0L02**	0.150
	5m cable	**XCSRM10L05**	**XCSRM30L05**	**XCSRML0L05**	0.309
	10 m cable	**XCSRM10L10**	**XCSRM30L10**	**XCSRML0L10**	0.562
	M12 connector	**XCSRM10M12**	**XCSRM30M12**	**XCSRML0M12**	0.044
	Pigtail M12 connector	**XCSRM10L01M12**	**XCSRM30L01M12**	**XCSRML0L01M12**	0.056

Detection characteristics *(2)*

Typical operating sensing distance (for detection of transponder presence)	12
Assured operating sensing distance	10
Assured release distance	25
Repeat accuracy	≤1.2%
Hysteresis	< 20%

Output states

Output states shown are with the dedicated transponder positioned in front of the reader.

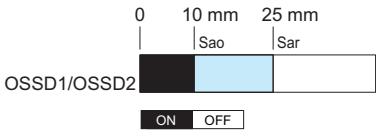

Outputs closed
Outputs open
Transient state

Sao: Assured operating sensing distance
Sar: Assured release distance
Conforming to EN/IEC 60947-5-3

Connections

5-pin M12 connector

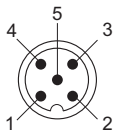

1 + 24 V ⎓
2 OSSD1 Safety output
3 0 V ⎓
4 OSSD2 Safety output
5 Status

Dimensions

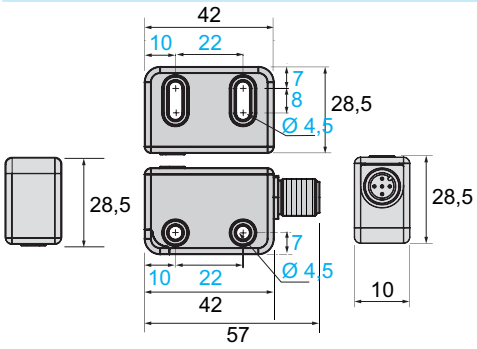

(1) The start command is effective after the operator has pressed and released the start button.
(2) These values are given for a face-to-face mounting configuration of the reader and transponder on a non-magnetic support, without misalignment between the transponder and the reader, and at an ambient temperature between +20 and +25 °C.

Safety detection solutions

Contactless RFID safety switches

XCSRM miniature format

Advanced model, 8-pin connector

Type	**Advanced miniature contactless RFID safety switches**	
Connection	**M12 connector**	**Pigtail, 8-pin M12 connector,**

ECOLAB Certified





References

Composition	Unique pairing	Unlimited pairings	Generic coded	Weight (kg)
■ Factory-paired switch and actuator ■ 6 blanking plugs ■ Quick Start Guide ■ EU and UKCA declaration of conformity	**XCSRM13M12**	**XCSRMU3M12**	**XCSRML3M12**	0.044
	XCSRM13L01M12	**XCSRMU3L01M12**	**XCSRML3L01M12**	0.056

Detection characteristics *(2)*

Typical operating sensing distance (for detection of transponder presence)	12
Assured operating sensing distance	10
Assured release distance	25
Repeat accuracy	≤1.2%
Hysteresis	< 20%

Output states

Output states shown are with the dedicated transponder positioned in front of the reader.

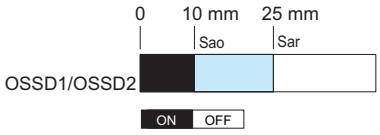

Outputs closed

Outputs open

Transient state

Sao: Assured operating sensing distance
Sar: Assured release distance
Conforming to EN/IEC 60947-5-3

Connections

8-pin M12 connector

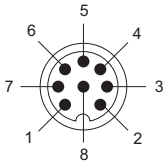

1 + 24 V ⎓
2 Safety input 1 for daisy-chain
3 0 V ⎓
4 OSSD1 Safety output
5 Status
6 Safety input 2 for daisy-chain
7 OSSD2 Safety output
8 EDM/Restart/Serial

Dimensions

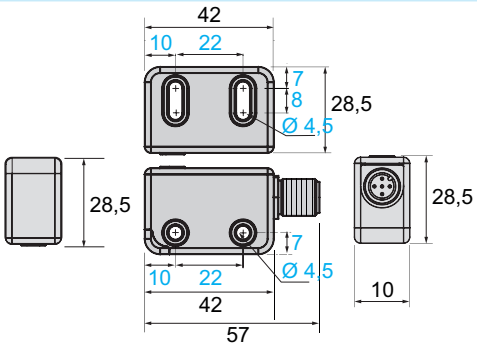

(1) The start command is effective after the operator has pressed and released the start button.
(2) These values are given for a face-to-face mounting configuration of the reader and transponder on a non-magnetic support, without misalignment between the transponder and the reader, and at an ambient temperature between +20 and +25 °C.

Safety detection solutions

Contactless RFID safety switches

Accessories for XCSRM miniature format



XCSRK1BU



XCSRK1BL



XCSRZY●



XCSRZSTK1



XZCP11V12L●



XZCP12V12L●



XZCR1511064D●



XZCP29P12L●



XZCP53P12L●



XZCR2829P11D●



XZCC12FDM50B



XZCC12FCM50B



XZCC12FDM80B



XZCC12FCM80B

Actuators

Description	Used with	Reference	Weight (kg)
Actuator, Unlimited pairing	XCSRMU●●●●, XCSRM3●●●●	**XCSRK1BU**	0.19
Actuator, Generic coded	XCSRML●●●●	**XCSRK1BL**	0.19

Splitter connectors

Description	Poles	Used with	Reference	Weight (kg)
Splitter M12 connector, Female-Male-Female (Y connector)	8-8-5, 1st switch in daisy chain	XCSRM●3●●●	**XCSRZY1**	0.026
	8-5-5, other switches in daisy chain		**XCSRZY2**	0.026

Mounting accessories

Description	Used with	Reference	Weight (kg)
Mounting supports	Switch and actuator	**XCSRZSTK1**	0.050

Cables

Description	Connector type	Length (m)	Reference	Weight (kg)
PUR pre-wired cables, 5 pins, for single XCSRM•0••• and advanced XCSRM•3••• *(1)* models				
PUR cable with pre-wired connectors XZCP	M12, female, straight, 5 pins	2	**XZCP11V12L2**	0.100
		5	**XZCP11V12L5**	0.250
		10	**XZCP11V12L10**	0.500
		20	**XZCP11V12L20**	1.000
	M12, female, elbowed, 5 pins	2	**XZCP12V12L2**	0.100
		5	**XZCP12V12L5**	0.250
		10	**XZCP12V12L10**	0.500
		20	**XZCP12V12L20**	1.000

Description	Male	Female	Length (m)	Reference	Weight (kg)
PUR jumper cable, 5 pins, for Y connectors (XCSRM•3••• in daisy-chain connection)					
Jumper cable XZ	M12, straight, 5 pins	M12, straight, 5 pins	1	**XZCR1511064D1**	0,08
			2	**XZCR1511064D2**	0,13
			5	**XZCR1511064D5**	0,325
			10	**XZCR1511064D10**	0,325

Description	Connector type	Length (m)	Reference	Weight (kg)
PUR pre-wired cables, 8 pins, for XCSRM•3••• standalone, EDM connection				
Pre wired connectors XZ	M12, female, straight, 8 pins	2	**XZCP29P12L2**	0,100
		5	**XZCP29P12L5**	0.250
		10	**XZCP29P12L10**	0.500
		20	**XZCP29P12L20**	1.000
	M12, female, elbowed, 8 pins	2	**XZCP53P12L2**	0.100
		5	**XZCP53P12L5**	0.250
		10	**XZCP53P12L10**	0.500
		20	**XZCP53P12L20**	1.000

Description	Male	Female	Reference	Weight (kg)
PUR jumper cable, 8 pins, for XCSRM•3••• in daisy-chain connection				
PUR jumper cable	M12, 8-pin, straight	M12, 8-pin, straight	**XZCR2829P11D2**	0.109
			XZCR2829P11D5	0.265
			XZCR2829P11D10	0.520
			XZCR2829P11D20	1.025

Cables glands

Description	Connector type	Nb of pins	Used with	Reference	Weight (kg)
M12 cable gland Pg 7, female Screw terminal and metal clamping ring	Straight	5	XCSRM•0•••	**XZCC12FDM50B**	0,020
	Elbowed 90°			**XZCC12FCM50B**	0,020
M12 cable gland, female Screw terminal and metal clamping ring	Straight	8	XCSRM•3•••	**XZCC12FDM80B**	0,020
	Elbowed 90°			**XZCC12FCM80B**	0,020

(1) With XCSRM•3•••, only for the connection between a safety control unit and the last XCSRM•3••• switch of a daisy chain

Safety detection solutions

Contactless RFID safety switches

XCSRM miniature format

Single and advanced models, accessories

Safety switches

Switch with M12 connector

XCSRM1●M12

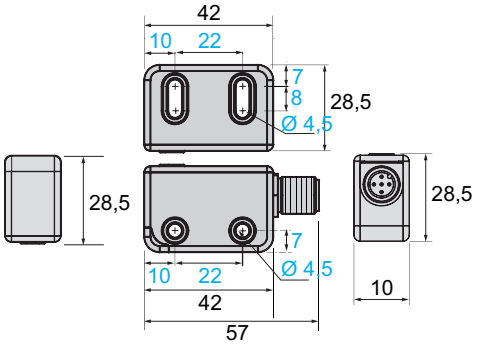

Switch with pigtail connector or pre-cabled

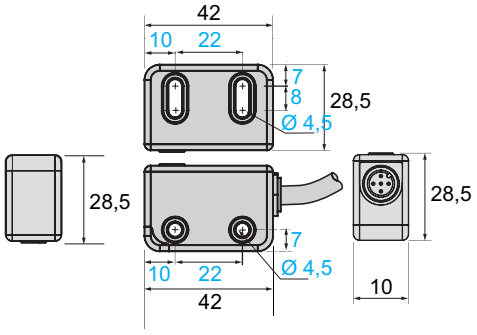

Accessories

Actuators

XCSRK1BU, XCSRK1BL

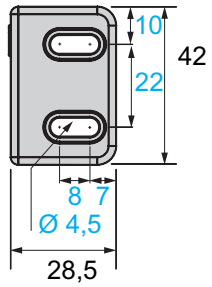

Splitter connector

XCSRZY1, XCSRZY2

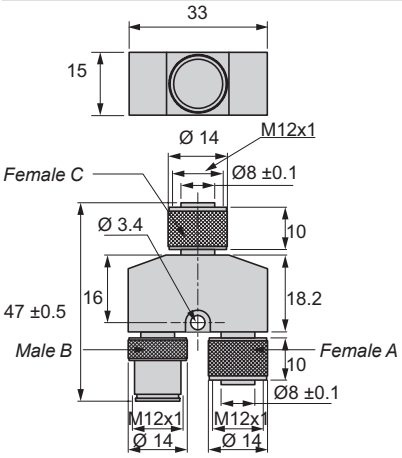

Mounting support for switch and actuator

XCSRZSTK1

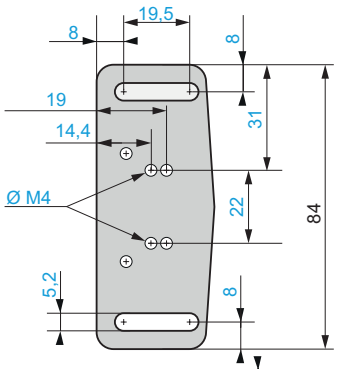

Mounting

Examples of face-to-face mounting configurations (recommended)

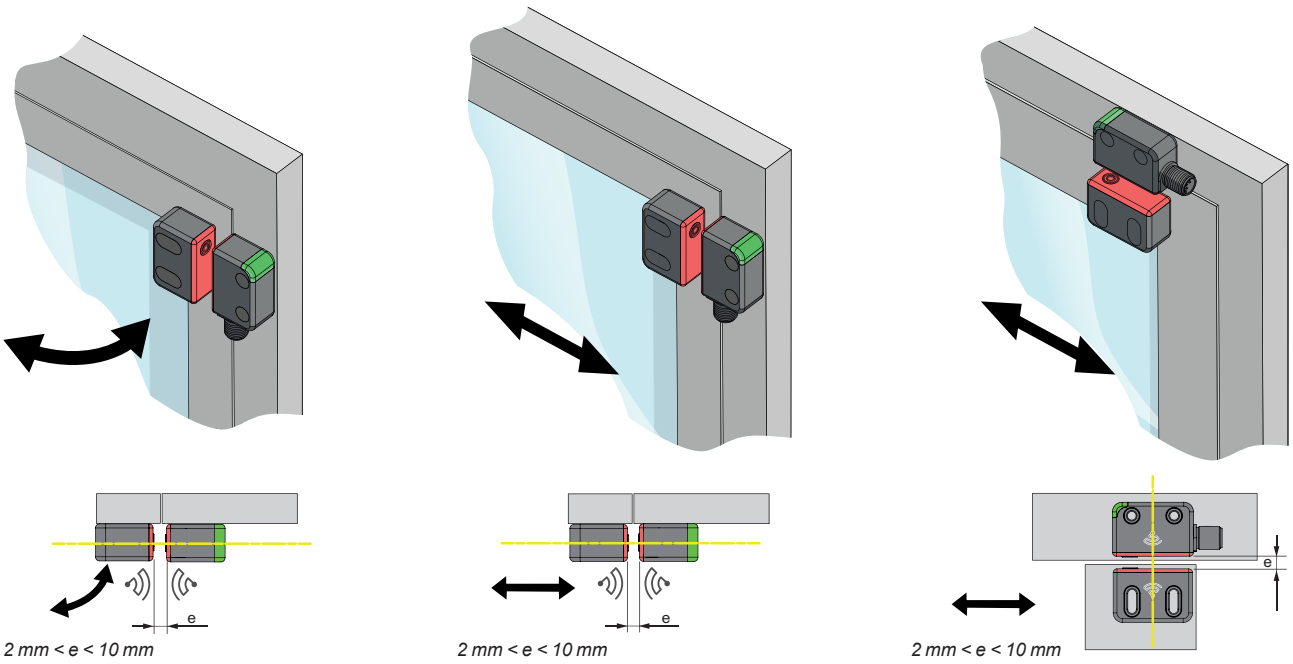

2 mm < e < 10 mm | *2 mm < e < 10 mm* | *2 mm < e < 10 mm*

e: minimum recommended mounting distance between actuator and switch

Curves

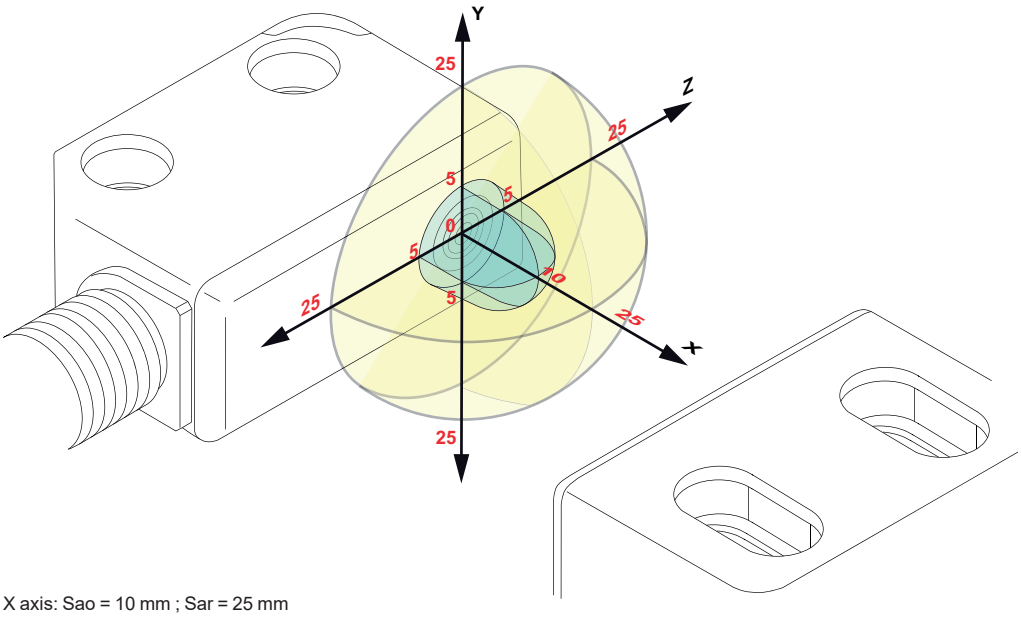

X axis: Sao = 10 mm ; Sar = 25 mm
Y axis: Sao = 5 mm ; Sar = 25 mm
Z axis: Sao = 5 mm ; Sar = 25 mm

Schemes
Note: these schemes are given as examples only, the designer should refer to the relevant safety standards for guidance.

Single Model - Connecting with a XPSUAK module

Example of Category 4/PL = e/SIL 3 connection

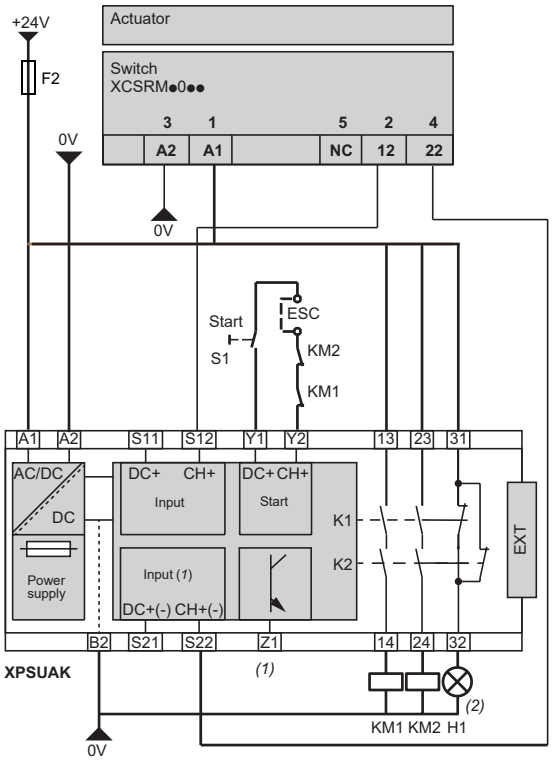

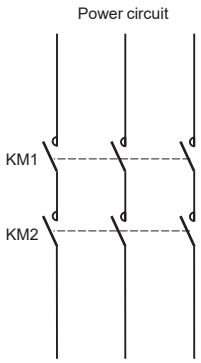

1	+ 24 Vdc
2	12
3	0 Vdc
4	22
5	Status

(1) Pulsed output for diagnostics
(2) XCSRM RFID safety switch indicator light deactivated

Advanced model - Series Connecting with a XPSUAF module

Example of Category 4/PL = e/SIL 3 series connection

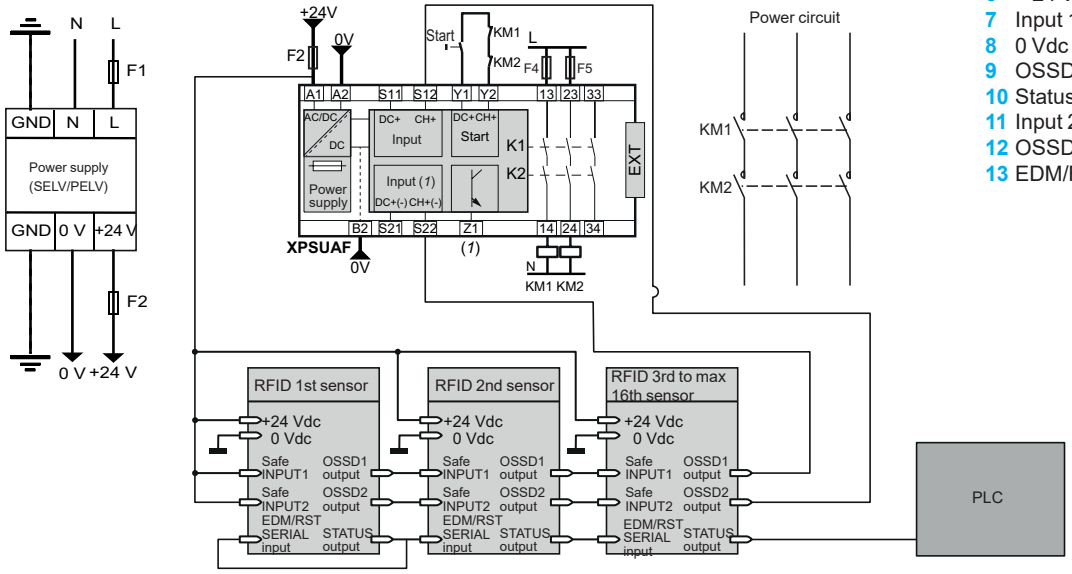

6	+ 24 Vdc	(BN) Brown
7	Input 1	(WH) White
8	0 Vdc	(BU) Blue
9	OSSD 1	(YE) Yellow
10	Status	(GY) Grey
11	Input 2	(PK) Pink
12	OSSD 2	(PU) Purple
13	EDM/Restart/Serial	(OR) Orange

(1) Pulsed output for diagnostic

Safety detection solutions

Safety coded magnetic switches
XCSDMC compact rectangular
XCSDMP standard rectangular, XCSDMR cylindrical
Plastic

ECOLAB Certified

XCSDMC

Rectangular, compact: 51 x 16 x 7 (mm)

Pre-cabled connection



Page 106

Connector on flying lead connection

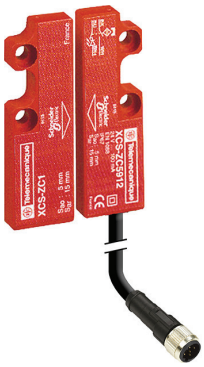

Page 107

XCSDMP

Rectangular, standard: 88 x 25 x 13 (mm)

Pre-cabled connection



Page 106

Connector on flying lead connection



Page 107

XCSDMR

Cylindrical, diameter: 30, length: 38.5 (mm)

Pre-cabled connection



Page 106

Connector on flying lead connection



Page 107

Safety detection solutions

Safety coded magnetic switches
XCSDMC compact rectangular
XCSDMP standard rectangular, XCSDMR cylindrical
Plastic

Environment

Conformity to standards	Products	EN/IEC 60947-5-1, UL 508, CSA C22-2 no. 14
	Machine assemblies	EN/IEC 60204-1, EN/ISO 14119 (Low Level of Coding)
Product certifications		UL, CSA, EAC, ECOLAB
Maximum safety level *(1)*		PL=e, category 4 conforming to EN/ISO 13849-1 and SIL 3 conforming to EN/IEC 61508
Reliability data B_{10D}		50,000,000 (value given for a service life of 20 years, limited by mechanical or contact wear)
Ambient air temperature	For operation	-25…+85 °C
	For storage	-40…+85 °C
Vibration resistance		10 gn (10…150 Hz) conforming to EN/IEC 60068-2-6
Shock resistance		30 gn (11 ms) conforming to EN/IEC 60068-2-27
Sensitivity to magnetic fields		≥ 0.3 mT
Electric shock protection		Class II conforming to EN/IEC 61140
Degree of protection	Conforming to IEC 60529	IP 66 and IP 67 for coded magnetic switches with pre-cabled connection IP 67 for coded magnetic switches with connector on flying lead connection
Materials		Thermoplastic case (PBT) PVC cable (ROHS)

Contact block characteristics

Rated operational characteristics			Ue: 24 V ⎓, Ie: 100 mA max.
Rated insulation voltage (Ui)			Ui: 100 V ⎓
Rated impulse withstand voltage (U imp)			2.5 kV conforming to EN/IEC 60947-5-1
Resistance across terminals		Contact with LED	57 Ω
		Contact without LED	10 Ω
Protection (of the fuse for the safety control unit protection)			External cartridge fuse: 500 mA gG (gl) (use a UL-recognized Type CC fuse in the United States). Optionally, in series with each switch contact to avoid damage to the internal protection in case of misuse.
Connection	XCSDMC	2-contact model	Pre-cabled, 4 x 0.25 mm², length: 2, 5 or 10 m depending on model or 4-pin male M8 connector on 0.15 m flying lead
	XCSDMP	2-contact model	Pre-cabled, 4 x 0.25 mm², length: 2, 5 or 10 m depending on model or 4-pin male M12 connector on 0.15 m flying lead
		3-contact model	Pre-cabled, 6 x 0.25 mm², length: 2, 5 or 10 m depending on model or 8-pin male M12 connector on 0.15 m flying lead
	XCSDMR	2-contact model	Pre-cabled, 4 x 0.25 mm², length: 2, 5 or 10 m depending on model or 4-pin male M12 connector on 0.15 m flying lead
Contact material			Rhodium
Electrical durability			1.2 million operating cycles
Switching capacity		Contact with LED	5…100 mA
		Contact without LED	0.1…100 mA
Insulation resistance			1000 MΩ
Maximum breaking capacity		Contact with LED	3 VA
		Contact without LED	10 VA
Maximum switching frequency			150 Hz

(1) Using an appropriate and correctly connected safety control unit.

ECOLAB Certified

Safety detection solutions

Coded magnetic safety switches

XCSDMC compact rectangular
XCSDMP standard rectangular, XCSDMR cylindrical
Plastic, pre-cabled

Type of switch	Rectangular		Cylindrical
	Compact 51 x 16 x 7	Standard 88 x 25 x 13	Diameter 30 Length 38.5







References of switches *(1)* ⚠ should be used in conjunction with safety control units (see page 32942/8)

Contact states shown are with the magnet positioned in front of the switch

2-pole 1 NC + 1 NO (staggered)	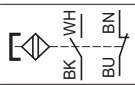	**XCSDMC5902**	**XCSDMP5902**	**XCSDMR5902**
2-pole 2 NC *(2)* (staggered)	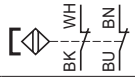	**XCSDMC7902**	**XCSDMP7902**	**XCSDMR7902**
3-pole 1 NC + 2 NO (1 NO staggered)	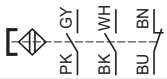	–	**XCSDMP5002**	–
3-pole 2 NC + 1 NO *(2)* (1 NC staggered)	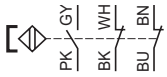	–	**XCSDMP7002**	–
2-pole 1 NC + 1 NO (staggered)	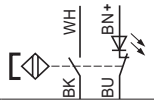	**XCSDMC5912**	**XCSDMP5912**	**XCSDMR5912**
2-pole 2 NC *(2)* (staggered)	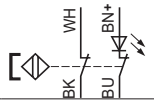	**XCSDMC7912**	–	**XCSDMR7912**
3-pole 1 NC + 2 NO (1 NO staggered)	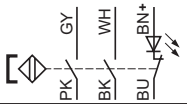	–	**XCSDMP5012**	–
3-pole 2 NC + 1 NO *(2)* (1 NC staggered)	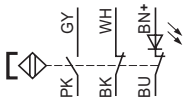	–	**XCSDMP7012**	–
Weight (kg)		0.101	0.180	0.146

(1) The references of ***XCSDM●*** *switches comprise a coded magnet (XCSZ●1) and a magnetic switch (XCSZ●●). Example: XCSDMP5012 comprises XCSZP1 (magnet) + XCSZP5012 (switch). Only the coded magnets are available as spare parts (see on page 32942/4).*
Switch pre-cabled with 2 m long cable. For other cable lengths, replace the last number of the reference ***(2)*** *with* ***5*** *for a 5 m long cable or with* ***10*** *for a 10 m long cable.*
Example: rectangular, compact switch with 1 NC + 1 NO contacts and 10 m cable becomes ***XCSDMC59010****.*
(2) To be associated with a safety control unit which allows 2 NC contact monitoring (for example XPSUAF●, XPSUS●, XPSUDN●, etc.).

Complementary characteristics not shown under general characteristics (page 32941/3)

Operating zone	Sao: 5 mm Sar: 15 mm	Sao: 8 mm Sar: 20 mm	Sao: 8 mm Sar: 20 mm
Approach directions	3 directions	3 directions	1 direction

Accessories

See page 32942/4

Dimensions:
page 110

Safety detection solutions

Coded magnetic safety switches
XCSDMC compact rectangular
XCSDMP standard rectangular, XCSDMR cylindrical
Plastic, connector on flying lead

Type of switch	Rectangular		Cylindrical
	Compact 51 x 16 x 7	Standard 88 x 25 x 13	Diameter 30 Length 38.5
	M8 connector	**M12 connector**	**M12 connector**
			

References of switches *(1)* ⚠ should be used in conjunction with safety control units (see page 112)

Contact states shown are with the magnet positioned in front of the switch

2-pole 1 NC + 1 NO (staggered)	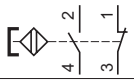	**XCSDMC590L01M8**	**XCSDMP590L01M12**	**XCSDMR590L01M12**
2-pole 2 NC *(2)* (staggered)	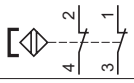	**XCSDMC790L01M8**	**XCSDMP790L01M12**	**XCSDMR790L01M12**
3-pole 1 NC + 2 NO (1 NO staggered)	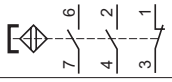	–	**XCSDMP500L01M12**	–
3-pole 2 NC + 1 NO *(2)* (1 NC staggered)	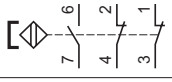	–	**XCSDMP700L01M12**	–
2-pole 1 NC + 1 NO (staggered)	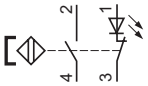	**XCSDMC591L01M8**	**XCSDMP591L01M12**	**XCSDMR591L01M12**
2-pole 2 NC *(2)* (staggered)	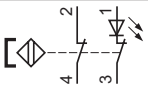	**XCSDMC791L01M8**	**XCSDMP791L01M12**	**XCSDMR791L01M12**
3-pole 1 NC + 2 NO (NO staggered)	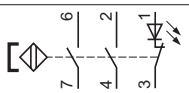	–	**XCSDMP501L01M12**	–
3-pole 2 NC + 1 NO *(2)* (NC staggered)	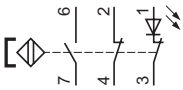	–	**XCSDMP701L01M12**	–
Weight (kg)		0.101	0.180	0.146

(1) The references of ***XCSDM●*** *switches comprise a coded magnet (XCSZ●1) and a magnetic switch (XCSZ●●). Only the coded magnets are available as spare parts (see on page 108).*
Example: XCSDMC590L01M8 comprises XCSZC1 (magnet) + XCSZC590L01M8 (switch).

(2) To be associated with a safety control unit which allows 2 NC contacts monitoring (for example XPSUAF●TE, XPSUS●TE, XPSUDN●TE, etc.)

Complementary characteristics not shown under general characteristics (page 105)

Operating zone	Sao: 5 mm Sar: 15 mm	Sao: 8 mm Sar: 20 mm	Sao: 8 mm Sar: 20 mm
Approach directions	3 directions	3 directions	1 direction

Accessories

See page 108

Dimensions:
page 110

Safety detection solutions
Coded magnetic safety switches
XCSDMC compact rectangular
XCSDMP standard rectangular, XCSDMR cylindrical
Accessories

Accessories

Accessories for coded magnetic switches	XCSDMC●●●2 XCSDMC●●●L	XCSDMP●●●2 XCSDMP●●●L	XCSDMR●●●2 XCSDMR●●●L
Fixing clamp	–		**XSZB130**
Weight (kg)	–		0.080
Additional coded magnet	**XCSZC1**	**XCSZP1**	**XCSZR1**
Weight (kg)	0.009	0.050	0.018
Non-magnetic shims	XCSZCC (lot of 2)	XCSZCP (lot of 2)	**XCSZCR**
Weight (kg)	0.008	0.012	0.002

Pre-wired female connectors for connector version switches
Pre-wired connector characteristics

Pre-wired connector type		XZCP0941L●, XZCP1041L●	XZCP29P11L●	XZCP1141L●, XZCP1241L●
Type of connection		Screw thread (metal clamping ring)	Screw thread (metal clamping ring)	Screw thread (metal clamping ring)
Number of contacts		4	8	4
Degree of protection		IP 67 (with clamping ring correctly tightened)		
Ambient air temperature	Static	-35…+90 °C	-35…+90 °C	-35…+90 °C
	Dynamic	-5…+90 °C	-5…+90 °C	-5…+90 °C
Cabling	Ø cable	5.2 mm	5.2 mm	5.2 mm
	wire c.s.a	4 x 0.34 mm^2	8 x 0.25 mm^2	4 x 0.34 mm^2
LED signaling		–	–	–
Nominal voltage		60 V ∼, 75 V ⎓	30 V ∼, 36 V ⎓	250 V ∼, 300 V ⎓
Nominal current		4 A	2 A	4 A
Insulation resistance		> 10^9 Ω	> 10^9 Ω	> 10^9 Ω
Contact resistance		⩽ 5 mΩ	⩽ 5 mΩ	⩽ 5 mΩ

References of pre-wired connectors (For connection to flying lead models)

503627

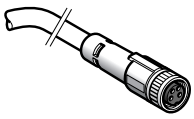

XZCP0941L●

503626

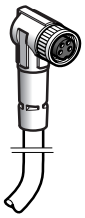

XZCP1041L●

534640

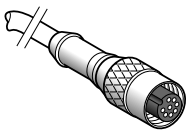

XZCP29P11L●

503630

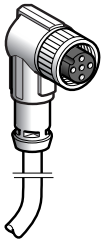

XZCP1241L●

563352

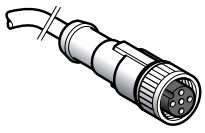

XZCP1141L●

Type of connector	Number of pins	For use with	Type	Cable length m	Reference	Weight kg
Female, M8	4	XCSDMC●9●	Straight	2	**XZCP0941L2**	0.080
				5	**XZCP0941L5**	0.180
				10	**XZCP0941L10**	0.360
			Elbowed	2	**XZCP1041L2**	0.080
				5	**XZCP1041L5**	0.180
				10	**XZCP1041L10**	0.360
Female, M12	8	XCSDMP●0●	Straight	2	**XZCP29P11L2**	0.100
				5	**XZCP29P11L5**	0.290
				10	**XZCP29P11L10**	0.470
Female, M12	4	XCSDMP●9●/ XCSDMR●9●	Straight	2	**XZCP1141L2**	0.090
				5	**XZCP1141L5**	0.190
				10	**XZCP1141L10**	0.370
			Elbowed	2	**XZCP1241L2**	0.090
				5	**XZCP1241L5**	0.190
				10	**XZCP1241L10**	0.370

Dimensions:
page 111

Safety detection solutions

Coded magnetic safety switches
XCSDMC compact rectangular
XCSDMP standard rectangular, XCSDMR cylindrical

Function diagrams with magnet present

XCSDMC59●●

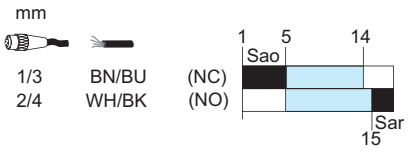

XCSDMC79●●

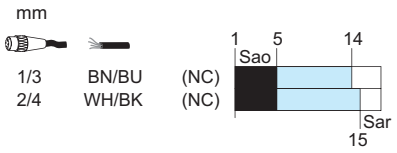

XCSDMP50●●

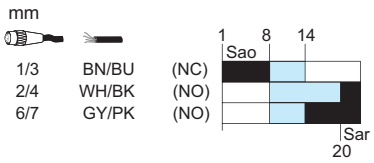

XCSDMP70●●

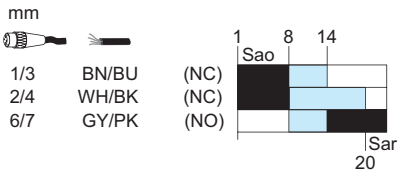

XCSDMR59●●/XCSDMP59●●

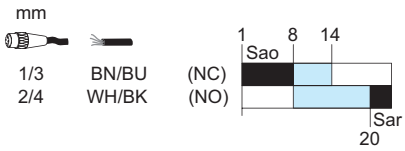

XCSDMR79●●/CS DMP79●●

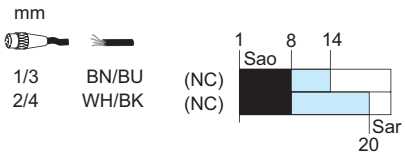

Contact closed

Contact open

Transient state

Sao: assured operating distance.
Sar: assured release distance.
Conforming to EN/IEC 60947-5-3

References:
page 106

Safety detection solutions
Coded magnetic safety switches
XCSDMC compact rectangular
XCSDMP standard rectangular, XCSDMR cylindrical
Plastic

Coded magnetic switches

XCSDMC

Pre-cabled connection

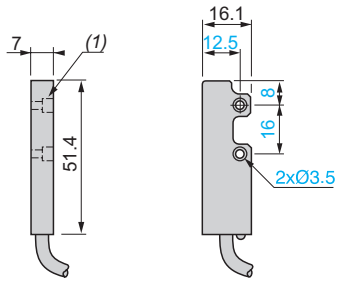

(1) Counterbored: Ø 6 x 3.5 mm.

Connector on flying lead connection

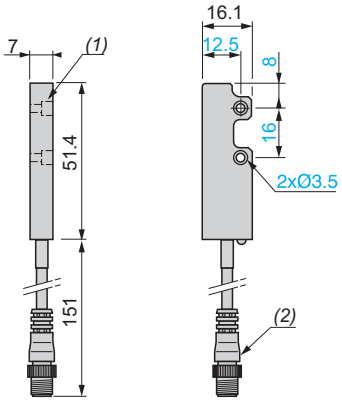

(1) Counterbored: Ø 6 x 3.5 mm.
(2) M8 4-pin connector.

Coded magnet for XCSDMC

XCSZC1

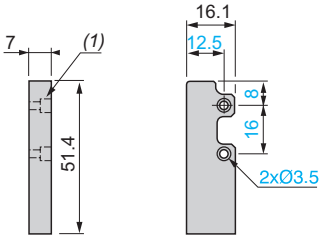

(1) Counterbored: Ø 6 x 3.5 mm.

XCSDMP

Pre-cabled connection

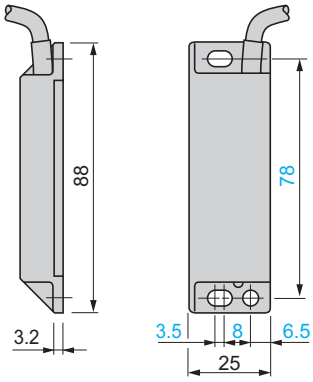

Connector on flying lead connection

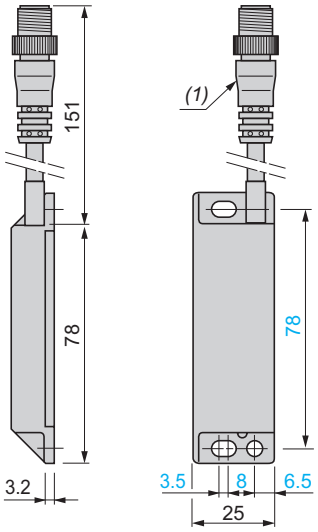

(1) M12 4 or 6-pin connector.

Coded magnet for XCSDMP

XCSZP1

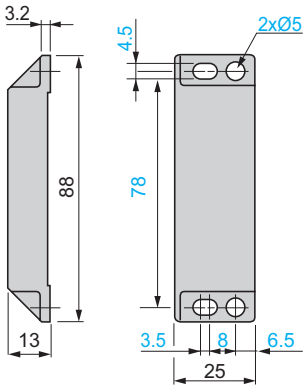

XCSDMR

Pre-cabled connection

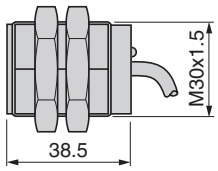

Connector on flying lead connection

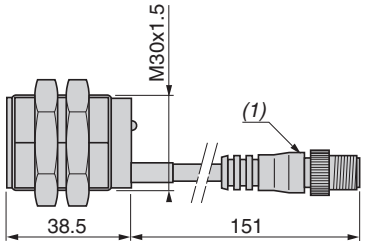

(1) M12 4-pin connector.

Coded magnet for XCSDMR

XCSZR1

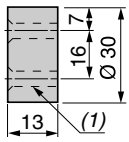

(1) 2 x Ø 4.3, countersunk: Ø 7.5 at 45°.

References:
page 106

Safety detection solutions
Coded magnetic safety switches
XCSDMC compact rectangular
XCSDMP standard rectangular, XCSDMR cylindrical
Plastic

Accessories

Fixing clamp
XSZB130

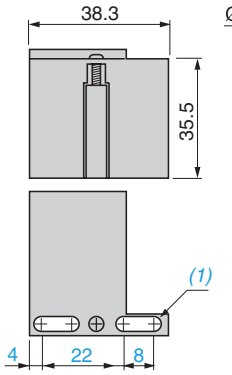

Non-magnetic shims
XCSZCC

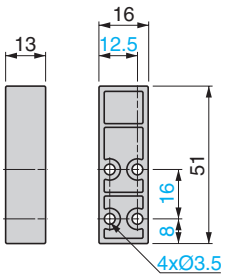

XCSZCP

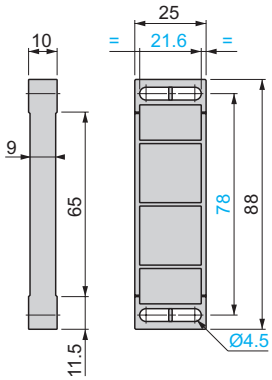

XCSZCR

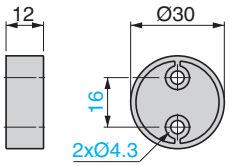

(1) 2 elongated holes Ø 4 x 8

Pre-wired connectors
XZCP0941L●

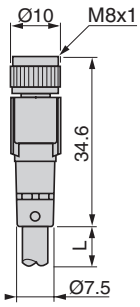

XZCP1041L●

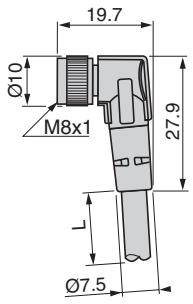

XZCP1141L●

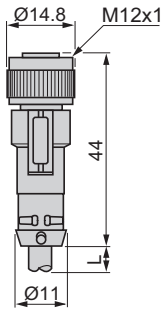

XZCP1241L●

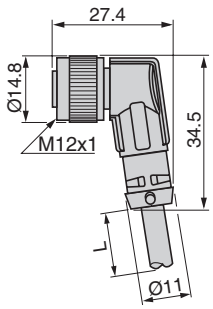

XZCP29P11L●

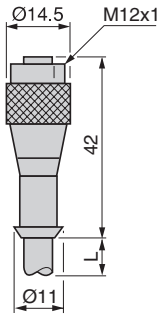

Mounting

XCSDMC

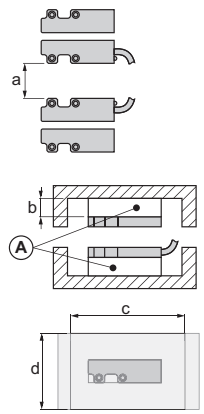

XCSDMP

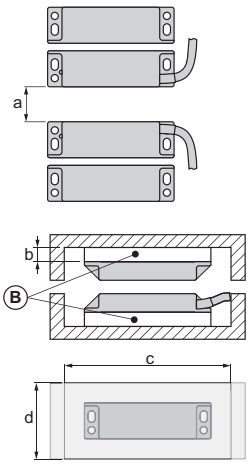

XCSDMR

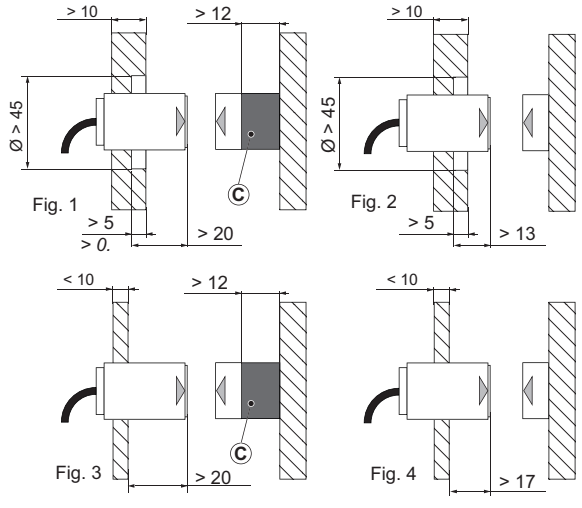

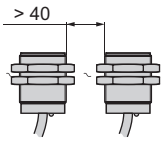

XCS *(mm)*	a ≥	b ≥	c x d ≥
DMC	40	13	81 x 55
DMP	100	10	118 x 55

Non-magnetic shims	
A	XCSZCC *(x2)*
B	XCSZCP *(x2)*
C	XCSZCR *(x1)*

Safety detection solutions
Coded magnetic safety switches
XCSDMC compact rectangular
XCSDMP standard rectangular, XCSDMR cylindrical

Schemes

M8 pre-wired connector
XZCP0941L●

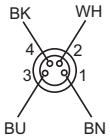

M12 pre-wired connector
XZCP1141L●, XZCP1241L●

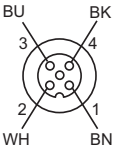

XZCP29P11L●

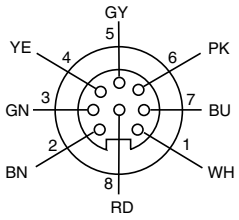

XCSDM●5●●● with XPSUS●TE

Wiring to PL=e, category 4 conforming to EN/ISO 13849-1 and SIL 3 conforming to EN/IEC 61508. Example with 3-pole 1 NC + 2 NO (1 NO staggered) contact.

Note: these schemes are given as examples only, the designer should refer to the relevant safety standards for guidance.

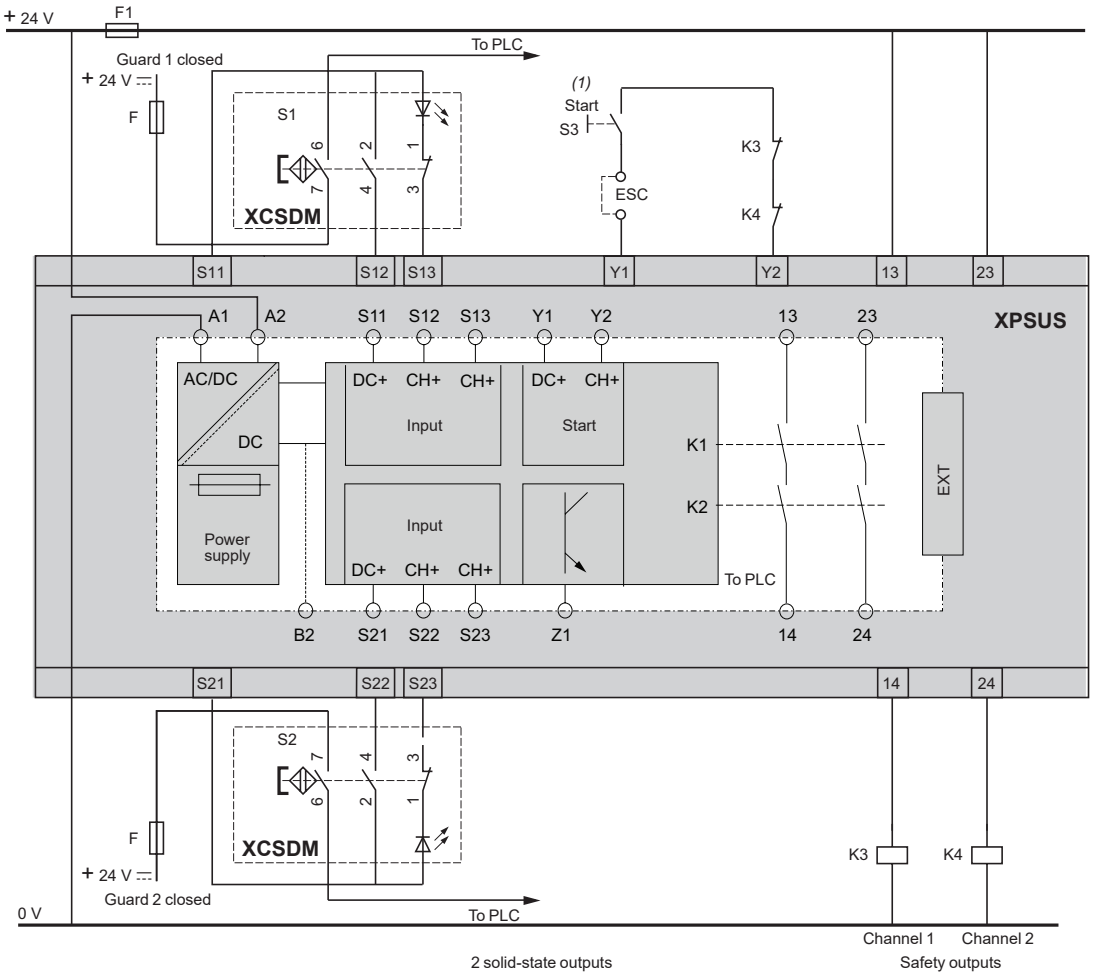

(1) The start function is configured by means of the XPSUAF●TE start function selector.

ESC: External start conditions.

References:
page 106

XCSDM●59●● with XPSUDN●TE

Wiring to PL=e, category 4 conforming to EN/ISO 13849-1 and SIL 3 conforming to EN/IEC 61508. Example with 2-pole 1 NC + 1 NO (staggered) contact.

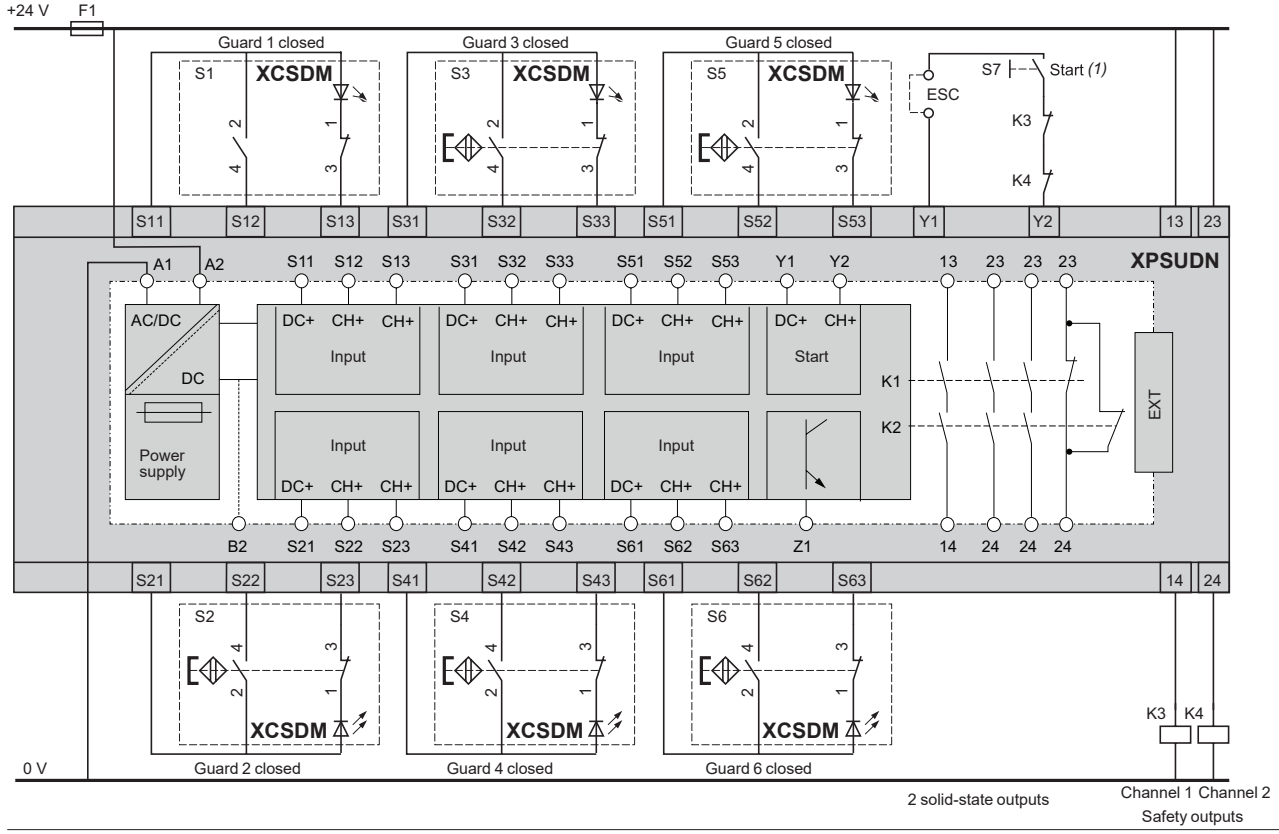

(1) The start function is configured by means of the XPSUAF●TE start function selector.

ESC: External start conditions.

XCSDM●79●● with XPSUAF●TE

Wiring up to PL=e, category 4 conforming to EN/ISO 13849-1 and SIL 3 conforming to EN/IEC 61508. Example with 2-pole 2 NC contact

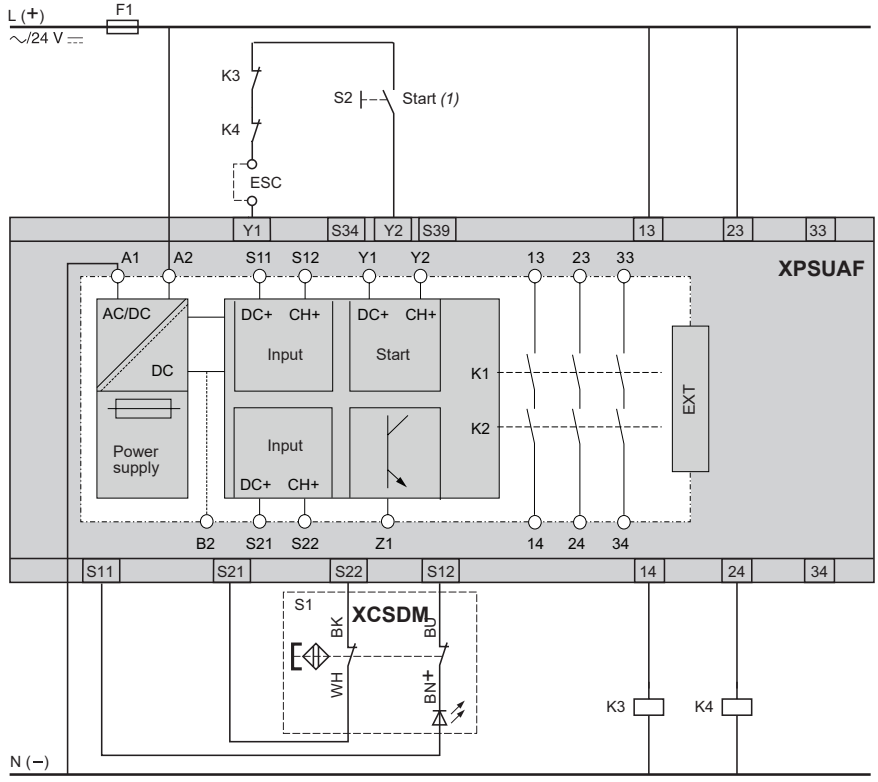

(1) The start function is configured by means of the XPSUAF●TE start function selector.

ESC: External start conditions.

Safety control units
XPSU universal safety relays

Safety functions		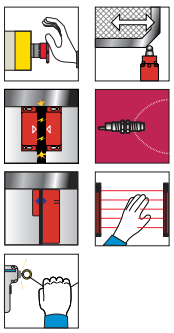	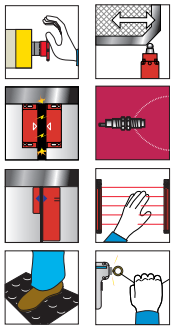
Safety modules for monitoring		- Emergency stop - Guard switch - Magnetic switch - Proximity safety switch - PNP sensor - RFID safety switch - Safety light curtain	- Emergency stop - Guard switch - Magnetic switch - Proximity safety switch - PNP & NPN sensor - RFID safety switch - Safety light curtain - Sensing mat/edges
			
Maximum achievable safety level		■ PL e/Category 4 conforming to ISO 13849-1 ■ SILCL 3 conforming to IEC 62061 ■ SIL 3 conforming to IEC 61508	
Conformity to standards		■ IEC 60947-5-1 ■ IEC 61508-1 (functional safety standard) ■ IEC 61508-2 (functional safety standard) ■ IEC 61508-3 (functional safety standard) ■ ISO 13849-1 (functional safety standard) ■ IEC 62061 (functional safety standard)	
Product certifications		■ cULus ■ TÜV	
Number of outputs	Safety	3 NO	2 NO + 1 NC
	Diagnostic	1 solid state	1 redundant NC, 1 solid state
Display		6 LEDs	6 LEDs
Supply voltage		24 V ∿/⎓ and 48 - 240 V ∿/⎓	
Synchronization time between inputs		Selectable	Selectable
Input channels	Number	2	2
Module type		**XPSUAF●TE**	**XPSUAK●TE**

Complete references and other XPSU universal safety relays are available on www.telemecaniquesensors.com

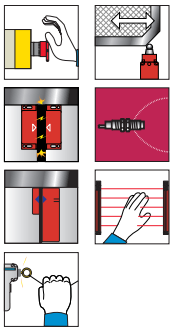	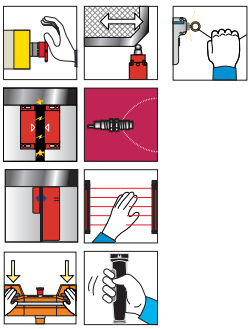	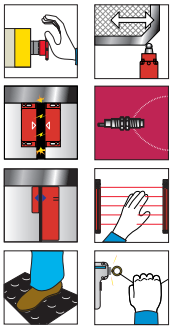
- Emergency stop - Guard switch - Magnetic switch - Proximity safety switch - PNP sensor - RFID safety switch - Safety light curtain	- Emergency stop - Guard switch - Magnetic switch - Proximity safety switch - PNP sensor - RFID safety switch - Safety light curtain - Two-hand control station - Enabling switch	- Emergency stop - Guard switch - Magnetic switch - Proximity safety switch - PNP & NPN sensor - RFID safety switch - Safety light curtain - Sensing mat/edges
		
■ PL e/Category 4 conforming to ISO 13849-1 ■ SILCL 3 conforming to IEC 62061 ■ SIL 3 conforming to IEC 61508		
■ IEC 60947-5-1 ■ IEC 61508-1 (functional safety standard) ■ IEC 61508-2 (functional safety standard) ■ IEC 61508-3 (functional safety standard) ■ ISO 13849-1 (functional safety standard) ■ IEC 62061 (functional safety standard)		
■ cULus ■ TÜV		
3 NO + 1 NC	2 NO	3 NO immediate + 3 NO configurable + 1 NC configurable
1 redundant NC, 1 solid state	1 solid state	2 solid state
16 LEDs	8 LEDs	8 LEDs
24 V ∿/⎓ and 48-240 V ∿/⎓		
Selectable	Selectable	Selectable
12	4	3
XPSUDN●TE	**XPSUS●TE**	**XPSUAT●TE**

Product reference index

D

DE9RA1012 38 81
DE9RA1016 81
DE9RA2012 73
DE9RP13520 73

X

XCSA502 50
XCSA512 50
XCSA522 50
XCSA702 50
XCSA712 50
XCSA722 50
XCSA802 50
XCSB502 50
XCSB702 50
XCSB802 50
XCSC502 50
XCSC702 50
XCSC802 50
XCSD3702G13 33
XCSD3702N12 33
XCSD3702P20 33
XCSD3710G13 33
XCSD3710N12 33
XCSD3710P20 33
XCSD3718G13 33
XCSD3718N12 33
XCSD3718P20 33
XCSD3719G13 33
XCSD3719N12 33
XCSD3719P20 33
XCSD3902G13 32
XCSD3902N12 32
XCSD3902P20 32
XCSD3910G13 32
XCSD3910N12 32
XCSD3910P20 32
XCSD3918G13 32
XCSD3918N12 32
XCSD3918P20 32
XCSD3919G13 32
XCSD3919N12 32
XCSD3919P20 32
XCSDMC590L01M8 109
XCSDMC591L01M8 109
XCSDMC790L01M8 109
XCSDMC791L01M8 109
XCSDMC5902 108
XCSDMC5912 108
XCSDMC7902 108
XCSDMC7912 108
XCSDMP500L01M12 109
XCSDMP501L01M12 109
XCSDMP590L01M12 109
XCSDMP591L01M12 109
XCSDMP700L01M12 109
XCSDMP701L01M12 109
XCSDMP790L01M12 109
XCSDMP791L01M12 109
XCSDMP5002 108
XCSDMP5012 108
XCSDMP5902 108
XCSDMP5912 108
XCSDMP7002 108
XCSDMP7012 108
XCSDMP7902 108
XCSDMR590L01M12 109
XCSDMR591L01M12 109
XCSDMR790L01M12 109
XCSDMR791L01M12 109
XCSDMR5902 108
XCSDMR5912 108
XCSDMR7902 108
XCSDMR7912 108
XCSE5312 72
XCSE5322 72
XCSE5332 72
XCSE5342 72
XCSE7312 72
XCSE7332 72
XCSE7342 72
XCSE8312 72
XCSE73127 72
XCSE83127 72
XCSLE353531M3 63
XCSLE373731M3 63
XCSLE2525312 62
XCSLE2727312 62
XCSLE3535312 62
XCSLE3737312 62
XCSLE3838312 62
XCSLF353531M3 59
XCSLF353541M3 61
XCSLF373731M3 59
XCSLF373741M3 61
XCSLF383831M3 59
XCSLF2525312 58
XCSLF2725312 58
XCSLF2727312 58
XCSLF3535312 58
XCSLF3535412 60
XCSLF3737312 58
XCSLF3737412 60
XCSLF3838312 58
XCSM3702L1 28
XCSM3710L1 28
XCSM3715L1 28
XCSM3716L1 28
XCSM3902L1 28
XCSM3910L1 28
XCSM3915L1 28
XCSM3916L1 28
XCSM4102L1 28
XCSM4110L1 28
XCSM4115L1 28
XCSM4116L1 28
XCSMP59L2 42
XCSMP59L5 42
XCSMP59L10 42
XCSMP70L2 42
XCSMP70L5 42
XCSMP70L10 42
XCSMP79L2 42
XCSMP79L5 42
XCSMP79L10 42
XCSMP80L2 42
XCSMP80L5 42
XCSMP80L10 42
XCSP3902G13 34
XCSP3902N12 34
XCSP3902P20 34
XCSP3910G13 34
XCSP3910N12 34
XCSP3910P20 34
XCSP3918G13 34
XCSP3918N12 34
XCSP3918P20 34
XCSP3919G13 34
XCSP3919N12 34
XCSP3919P20 34
XCSPA192 46
XCSPA292 46
XCSPA492 46
XCSPA592 46
XCSPA692 46
XCSPA792 46
XCSPA892 46
XCSPA992 46
XCSPL552 38
XCSPL562 38
XCSPL572 38
XCSPL582 38
XCSPL592 38
XCSPL752 38
XCSPL762 38
XCSPL772 38
XCSPL782 38
XCSPL792 38
XCSPL862 38
XCSPL962 38
XCSPR552 38
XCSPR752 38
XCSPR952 38
XCSRC10M12 90
XCSRC11AM12 88
XCSRC11MM12 88
XCSRC12M12 89
XCSRC30M12 90
XCSRC31AM12 88
XCSRC31MM12 88
XCSRC32M12 89
XCSRD210MDB 91
XCSRK1BL 102
XCSRK1BU 102
XCSRK2A3 91
XCSRM10L01M12 100
XCSRM10L02 100
XCSRM10L05 100
XCSRM10L10 100
XCSRM10M12 100
XCSRM13L01M12 101
XCSRM13M12 101
XCSRM30L01M12 100
XCSRM30L02 100
XCSRM30L05 100
XCSRM30L10 100
XCSRM30M12 100
XCSRML0L01M12 100
XCSRML0L02 100
XCSRML0L05 100
XCSRML0L10 100
XCSRML0M12 100
XCSRML3L01M12 101
XCSRML3M12 101
XCSRMU3L01M12 101
XCSRMU3M12 101
XCSRZE 91
XCSRZSRC1 91
XCSRZSTK1 91 102
XCSRZY1 102
XCSRZY2 102
XCSTA592 46
XCSTA792 46
XCSTA892 46
XCSTE5312 80
XCSTE5332 80
XCSTE5342 80
XCSTE6312 80
XCSTE7312 80
XCSTE7342 80
XCSTR552 38
XCSTR752 38
XCSTR852 38
XCSZ01 50 64 73
XCSZ02 50 64 73
XCSZ03 50 64 73
XCSZ05 50 64 73
XCSZ11 47 81
XCSZ12 47 81
XCSZ13 47 81
XCSZ14 47 81
XCSZ15 47 81
XCSZ21 47
XCSZ25 51 64 73
XCSZ27 51 73
XCSZ28 46 81
XCSZ29 42
XCSZ30 64
XCSZ31 51
XCSZ32 51
XCSZ71 91
XCSZ72 91
XCSZ81 42
XCSZ83 42
XCSZ84 42
XCSZ85 42
XCSZ90 51 64 73
XCSZ91 46 81
XCSZ100 64 81
XCSZ200 46 81
XCSZ210 64
XCSZ211 64
XCSZC1 110
XCSZCR 110
XCSZP1 110
XCSZR1 110
XSZB130 110
XZCC12FCM50B 102
XZCC12FCM80B 102
XZCC12FDM50B 102
XZCC12FDM80B 102
XZCC23FCM190S 65
XZCC23FDM190S 65
XZCP11V12L2 92 102
XZCP11V12L5 92 102
XZCP11V12L10 92 102
XZCP11V12L20 92 102
XZCP12V12L2 92 102
XZCP12V12L5 92 102
XZCP12V12L10 92 102
XZCP12V12L20 92 102
XZCP29P11L2 110
XZCP29P11L5 110
XZCP29P11L10 110
XZCP29P12L2 92 102
XZCP29P12L5 92 102
XZCP29P12L10 92 102
XZCP29P12L20 92 102
XZCP53P12L2 92 102
XZCP53P12L5 92 102
XZCP53P12L10 92 102
XZCP53P12L20 92 102
XZCP0941L2 110
XZCP0941L5 110
XZCP0941L10 110
XZCP1041L2 110
XZCP1041L5 110
XZCP1041L10 110
XZCP1141L2 110
XZCP1141L5 110
XZCP1141L10 110
XZCP1241L2 110
XZCP1241L5 110
XZCP1241L10 110
XZCR2829P11D2 102
XZCR2829P11D5 102

XZCR2829P11D10	*102*
XZCR2829P11D20	*102*
XZCR1111064D03	*92*
XZCR1111064D3	*92*
XZCR1111064D5	*92*
XZCR1111064D10	*92*
XZCR1111064D25	*92*
XZCR1511064D1	*102*
XZCR1511064D2	*102*
XZCR1511064D5	*102*
XZCR1511064D10	*102*

www.telemecaniquesensors.com

The information provided in this catalogue contains description of products sold by TMSS France, its subsidiaries and other affiliated companies ('Offer') with technical specifications and technical characteristics of the performance of the corresponding Offer.

The content of this document is subject to revision at any time without notice due to continued progress in methodology, design and manufacturing.

To the extent permitted by applicable law, no responsibility or liability is assumed by TMSS France, its subsidiaries and other affiliated companies for any type of damage arising out of or in connexion with (a) informational content of this catalogue not conforming with or exceeding the technical specifications, or (b) any error contained in this catalogue, or (c) any use, decision, act or omission made or taken on the basis of or in reliance on any information contained or referred to in this catalogue.

NEITHER TMSS FRANCE, ITS SUBSIDIARIES, NOR ITS OTHER AFFILIATES, AS THE CASE MAYBE, MAKE NO WARRANTY OR REPRESENTATION OF ANY KIND, WHETHER EXPRESS OR IMPLIED, AS TO WHETHER THIS CATALOGUE OR ANY INFORMATION CONTAINED THEREIN SUCH AS PRODUCTS WILL MEET REQUIREMENTS, EXPECTATIONS OR PURPOSE OF ANY PERSON MAKING USE THEREOF.

Telemecanique™ Sensors is a trademark of Schneider Electric Industries SAS used under license by TMSS France. Any other brands or trademarks referred to in this catalogue are property of TMSS France or, as the case may be, of its subsidiaries or other affiliated companies. All other brands are trademarks of their respective owners.
This catalogue and its content are protected under applicable copyright laws and provided for informative use only.
No part of this catalogue may be reproduced or transmitted in any form or by any means (electronic, mechanical, photocopying, recording, or otherwise), for any purpose, without the prior written permission of TMSS France. Copyright, intellectual, and all other proprietary rights in the content of this catalogue (including but not limited to audio, video, text, and photographs) rests with TMSS France, its subsidiaries, and other affiliated companies or its licensors. All rights in such content not expressly granted herein are reserved. No rights of any kind are licensed or assigned or shall otherwise pass to persons accessing this information.

As standards, specifications and design change from time to time, please ask for confirmation of the information given in this publication.

©2024, TMSS France, All Rights Reserved.

TMSS France SAS
Share capital: 366 931 214 €
Tour Eqho, 2 avenue Gambetta
92400 Courbevoie – France
908 125 255 RCS Nanterre

October 2024 - V2.0

TESEBRO000050EN