Proximity sensors
SG and ST ranges
Magnet actuated sensors

Catalogue



YAGEO GROUP Brings you | Telemecanique Sensors

Contents

Proximity sensors
SG-ST ranges

- General . . . . . page 2

SG range, magnet actuated sensors

- Surface mounted style
  - References . . . . . page 4
  - Characteristics, options, schemes, dimensions . . . . . page 5
- Limit switch style
  - References . . . . . page 6
  - Characteristics, schemes, dimensions . . . . . page 7
- Tubular stype
  - References . . . . . page 8
  - Characteristics, options, schemes, dimensions . . . . . page 9
- Maintained contact
  - References . . . . . page 10
  - Dimensions . . . . . page 11
- Magnet actuators
  - References . . . . . page 12
  - Dimensions . . . . . page 13

ST range, grounded probe switch

- Grounded probe switch
  - References . . . . . page 14
  - Characteristics, schemes, dimensions . . . . . page 15
- Product references index . . . . . page 16

Proximity sensors
Magnet actuated proximity switches, SG

Presentation
A magnet actuated sensor is a type of sensor that detects the presence or absence of a magnetic field. When a magnet moves into the proximity of the sensor, it triggers a response, typically by opening or closing an electrical circuit.
These sensors are commonly used for position sensing, speed detection, and end-of-travel detection in various applications. They are popular due to their non-contact operation, long-term reliability, and suitability for harsh environments.
Magnet actuated sensors are often employed in industrial machinery, automotive systems, door and window monitoring, and other applications where non-contact sensing is preferred.
By understanding the presence or absence of a magnetic field, these sensors provide valuable input for control and monitoring purposes, contributing to the efficiency diverse systems and processes.

Advantages
No mechanical parts subject to wear.
No maintenance required.
Unaffected by external mechanical influences.
Flexibility due to wide operating distances.
No external power sources.

Features
- “No Touch” proximity sensing
- No mechanical linkage or levers
- Senses magnetic fields—senses through non-magnetic material
- Epoxy-encapsulated construction
- Solid state outputs
- Precise 0.003 in. repeatability
- Fast switching speeds

Methods of actuation
Perpendicular or Parallel—The magnet and switch must be brought within a specific proximity of one another. The distance varies according to the strength of the magnet.
When the magnet is close enough, the reed closes or “pulls in.” When the magnet is taken away, the reed contact opens or “drops out.”

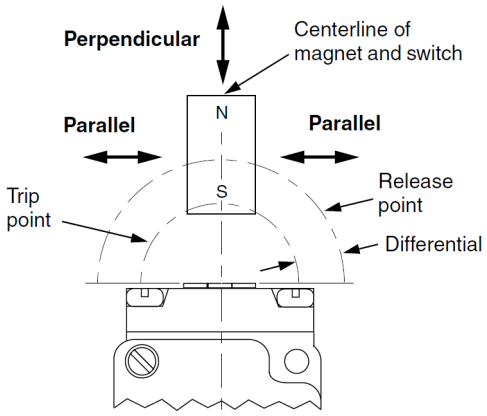

Proximity sensors
Magnet actuated proximity switches, SG

Sensing Range

The sensing range of magnet actuated proximity switches is a function of the strength (gauss) of the magnet being sensed by the switch. The sensor is designed and constructed to sense either the north or south pole of the magnet.
Typical operating magnets are shown. However, any commercial or industrial magnet, either permanent or electromagnetically polarized, can be used.
When using magnets other than those shown, the sensing range and hysteresis (differential) will be different.

Installation

Mount the external magnet so that the centerline of the magnet is aligned with the center of the sensing head and is within the distance specified.
In this position, the switch is in the operated mode. Moving the magnet farther away from the sensing point resets the switch to the normal mode.
A permanent magnet can be mounted in a fixed position relative to the switch.
Note that when a ferromagnetic material is placed in the gap between the magnet and the switch, it can short circuit enough of the field to reduce flux density below the switching level.

Nominal sensing distance (in.)

Type of sensors	Surface mounted style	Limit switch style	Tubular style	Maintained contact
With magnet 7046, up to	1.3	1.3	1.3	1.3
With magnet 7093, up to	0.7	0.7	0.7	1

Proximity sensors
SG range
Magnet actuated sensors
Surface mounted style



SGA8177

Presentation

Surface mounted magnet actuated sensors for industrial applications.
- Sensing is independent of magnet polarity
- Typical applications: security systems (gate interlocks), high speed rotational counting, identification of metal bins with magnet coded “labels”, sensing through non magnetic walls, etc.

Features

- Housing; aluminum, plastic (PBT) for SG08168 and SG28195
- Completely epoxy encapsulated
- Very fast response time (reed output only)
- PLC compatible AC models (triac output)
- High transients protection (AC models)
- No bouncing.

Magnet actuated proximity sensors

Read Output - DC only

Circuit Type	AC ratings			DC ratings			Leakage (mA)	Reference
	VA (max.)	Voltage *(4)*	Current (max.)	VA (max.)	Voltage (max.)	Current (max.)		
Reed output - DC only								
NO	-	-	-	10	200	0.5 A	0	**SGA8016**
	-	-	-	10	200	0.5 A	0	**SGA8031**
Reed output - DC only - built-in resistor protection								
NO	-	-	-	10	200	0.5 A	0	**SGA8182**
Reed output - AC and DC - built-in RC protection								
NO	10	130	0.5 A	10	200	0.5 A	6 *(1) (3)*	**SGA8176**
	10	130	0.5 A	10	200	0.5 A	6 *(1) (3)*	**SGA8177**
Triac output - AC only (inductive PLC)								
NO	240	120	2.0 A	-	-	-	1.7 *(1) (2)*	**SG08168** *(5)*
NO/NC	50	240	0.5 A	-	-	-	1.7 *(1) (2)*	**SG28195** *(5)*

(1) PLC applications.
(2) PLC compatible.
(3) Bleeder resistor required.
(4) For reed output: max. voltage. For triac output: nominal voltage.
(5) UL Recognized.

Compatible magnet actuators, see page 12

Proximity sensors
SG range
Magnet actuated sensors
Surface mounted style

Characteristics

Product certifications	UL (SG08168 and SG28195 only)	
Mechanical		
Standard temperature range	-40° F to +140° F (-40° C to +60° C)	
Enclosure ratings	NEMA Types 1, 4, 13	
Vibration resistance	20 G (10 to 2000 Hz)	
Shock resistance	50 G for 11 mS	
Differential	Max. 75%	
Repeatability	0.003 in. (0.80 mm)	
Electrical	**AC (triac)**	**DC**
Voltage drop (across switch)	2 V	0 V (IR for SGA8182) *(1)*
Minimum load current	15 mA	-
On delay (ms)	1 ms	0.75 ms
Off delay (ms)	8 ms	0.75 ms
Cable, 3 ft (0,9m)	0.31 mm² (22 AWG) vinyl, except: 1.2 mm² (16 AWG) SJTO for SG08168	

(1) Voltage drop = IR, where I= load current, R = 150 Ω

Options

	Cable type	**Suffix**
5 meters (16') of cable	Vinyl	L05
	SJTO (SG08168)	L05
10 meters (33') of cable (for triac and models with built in resistor)	Vinyl	L10
	SJTO (SG08168)	L10

Ex: SG08168L05

Wiring schemes

SGA8016, SGA8031, SGA8182, SGA8176, SGA8177, SG08168

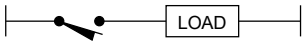

SG28195



Dimensions

SGA8016, SGA8177, SGA8182

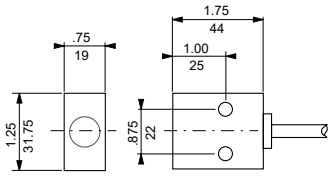

SGA8031, SGA8176

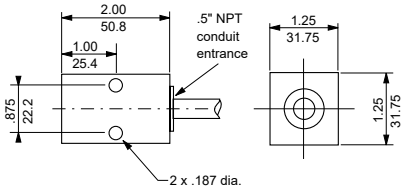

SG08168, SG28195

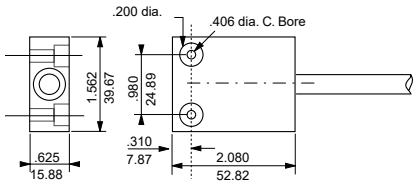

Dual Dimensions inches / mm

Proximity sensors
SG range
Magnet actuated sensors
Limit switch style



SG08003

Presentation

Limit switch style magnet actuated proximity sensors for heavy duty industrial applications.

- Sensing is independent of magnet polarity
- Typical applications: security systems (gate interlocks), high speed rotational countings, identification.

Features

- Housing: zinc die-cast
- Completely epoxy encapsulated
- Plug in models for fast replacement
- Very fast response time (reed output only)
- PLC compatible AC models
- High transient protection
- Overload and short protection (transistor models)
- No bouncing
- 0.5 in. (12.7 mm) NPT conduit entrance.
- UL recognized (except where indicated).

Magnet actuated proximity sensors

Circuit Type	AC ratings (inductive or resistive)			VA (max.)	DC ratings (resistive only)		Leakage (mA)	Reference
	VA (max.)	Voltage (nom.)	Current (max.)		Voltage (max.)	Current (max.)		
AC triac output, non plug-in								
NO	360	120	3.0 A				1.7 (P) *(1)*	**SG08003**
NC	360	120	3.0 A				1.7 (P) *(1)*	**SG18004**
Non plug-in with light indicator								
NO	360	120	3.0 A				1.7 (P) *(1)*	**SG0L8003**
NC	360	120	3.0 A				1.7 (P) *(1)*	**SG1L8004**
Reed output, non plug-in (AC model has built-in surge RC protection)								
NO				10	200	0.5 A	0	**SGA8005**
NO/NC				3	200	0.25 A	0	**SGC8027**
NO/NC				20	500	1.5 A	0	**SGC8025**

(1) (P)=PLC compatible. (R) Bleeder resistor required for PLC compatibility

Compatible magnet actuators, see page 12

Proximity sensors
SG range
Magnet actuated sensors
Limit switch style

Characteristics

Product certifications	UL					
Mechanical						
Standard temperature range	-40° F to +140° F (-40° C to +60° C)					
Enclosure ratings	NEMA Types 1, 4, 13					
Vibration resistance	20 G (10 to 2000 Hz)					
Shock resistance	50 G for 11 ms					
Differential	Max. 75%					
Repeatability	0.003 in. (0.80 mm)					
Electrical	**AC (triac)**	**Transistor**	**Reed**			
Voltage drop (across switch)	2 V	-	-			
Minimum load current (maximum)	15 mA	-	-			
			SGA8006	**SGA8040**	**SGS8027**	**SGC8025**
On delay (maximum)	1 ms	0.75 ms	0.75 ms	2 ms	1 ms NO/ 1.5 ms NC	2 ms NO/ 4 ms NC
Off delay (maximum)	-	0.75 ms	0.75 ms	2 ms	11 ms NO/ 1.5 ms NC	2 ms NO/ 4 ms NC
Cable - screw terminal	1.5 mm² (16AWG)	-				

Wiring schemes

SG08003, SG0L8003, SG1L8004, SGA8005

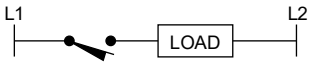

SG18004

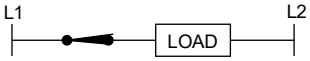

SGC8027, SGC8025

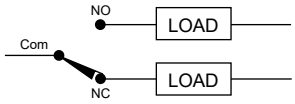

Terminal strip marked: NO-COM-NC

Dimensions

SGA8005, SG08003, SGC8027, SG18004, SG0L8003, SG1L8004

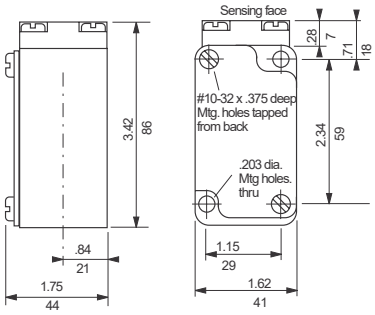

SGC8025

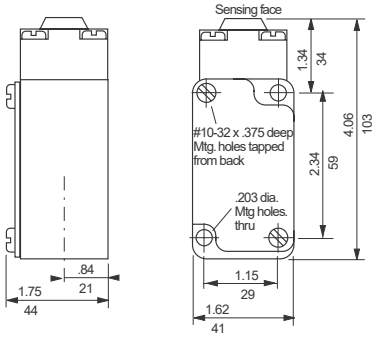

Dual Dimensions inches / mm

Proximity sensors
SG range
Magnet actuated sensors
Tubular style



SGA8179



SGA8038



SGA8057



SGA8058

Presentation

Tubular magnet actuated proximity sensors for heavy duty applications such as:
- High speed rotational counting,
- Identification of metal bins with magnet coded “labels”
- Sensing through non-magnetic walls

Sensing is independent of magnet polarity.

Features

- Housings: aluminum for SGA8057; plastic (PVC) for SGC8058, SGA8072, polymide for SGA8179, SGA8180, SGA8181, SGA8038, SGC8178
- Completely epoxy encapsulated
- High transient protection
- Threaded and smooth housings
- High voltage versions
- SPST and SPDT models
- No bouncing
- UL recognized (except where noted).

Magnet actuated proximity sensors

Circuit Type	AC ratings (inductive or resistive)			VA (max.)	DC ratings (resistive only)		Leakage (mA)	Reference
	VA (max.)	Voltage (nom.)	Current (max.)		Voltage (max.)	Current (max.)		
Reed output AC & DC switching (Built-in RC protection), threaded								
NO	15	120	1.0 A	12	48	0.28 A	6 *(1)*	**SGA8057**
NO/ NC	15	120	1.0 A	15	100	1.0 A	6 *(1)*	**SGA8058** *(1)*
NO	15	120	1.0 A	15	250	1.0 A	6 *(1)*	**SGA8072**
NO	25	480	1.0 A	25	480	1.0 A	0.16	**SGA8179** *(3)*
Reed output - DC, threaded, resistor built-in for long cable runs *(2)*								
NO	-	-	-	10	200	0.5 A	0	**SGA8180** *(3)*
NC	-	-	-	3	100	0.25 A	0	**SGC8178** *(3)*
Reed output - AC & DC (built-in RC protection), smooth								
1 NO	15	120	1.0 A	15	250	1.0 A	6 *(1)*	**SGA8038** *(3)*

(1) Bleeder resistor required for PLC AC switching compatibility
(2) 150 Ω for SGA8180 and 470 Ω for SGC8178
(3) Not UL

Compatible magnet actuators, see page 12

Proximity sensors
SG range
Magnet actuated sensors
Tubular style

Characteristics

Product certifications (except where noted)	UL		
Mechanical			
Temperature range	-40° F to +140° F (-40° C to +60° C)		
Enclosure ratings	NEMA Types 1, 4, 13		
Vibration resistance	20 G (10 to 1000 Hz)		
Shock resistance	50 G for 11 ms		
Differential	Max. 75% (except SGA8179 = 1.06 in. maximum)		
Repeatability	Max. 0.003 in. (0.80 mm)		
Electrical	**Reed AC and DC**	**SGA8180 Built-in resistor (DC)**	**SGA8181 Built-in resistor (DC)**
Voltage drop (across switch)	25 mV	IR	IR
On delay (maximum)	2 ms	0.75 ms	2.5 ms NO/ 3.5 ms NC
Cable - 3 ft. (0.9 m)	22-2 vinyl: SGA8038, 8180; 23-2 vinyl SGC8181		
	16-2 SJTO: SGA8057, 8072. SO cable for SGA8179		

(1) Voltage drop = IR, where I is the load current and R the buit-in resistor

Options

Description		**Suffix**
5 m (16.4 ft) of cable	Vinyl	**L05**
	SJTO (8057, 8072, 8179)	**L05**
10 m (32.8 ft) of cable (for models with built-ion resistor)	Vinyl	**L10**
	SJTO (8057, 8072), SO (8179)	**L10**
20 m (65.6 ft) of cable	SO (8179)	**L20**

Wiring schemes

SGA8057, SGA8072, SGA8179, SGA8180, SGA8038

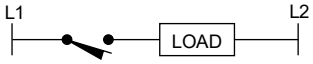

SGC8058, SGC8181

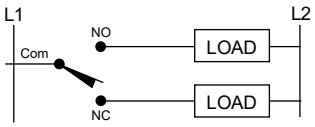

Black – Com
Blue – NO
Brown – NC

Dimensions

SGA8057, SGC8058, SGC8072, SGC8178

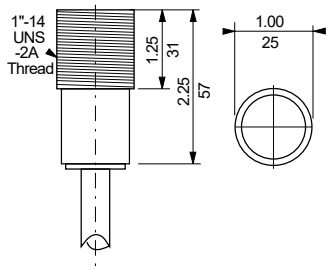

SGA8057 (Aluminum)
SGC8058 (PVC)
SGC8072 (PVC)
SGC8178 (Polymide)

SGA8179, SGA8180

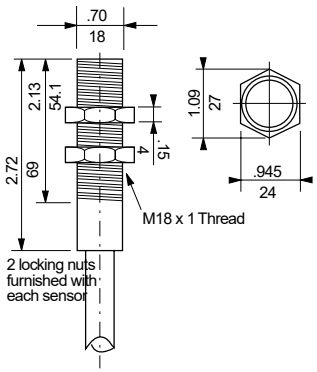

SGA8038

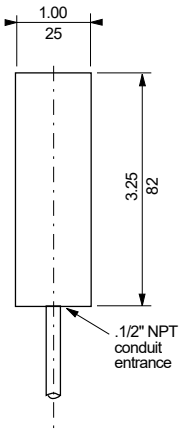

Dual Dimensions inches / mm

Proximity sensors
SG range
Magnet actuated sensors
Maintained contact



SG08026

Presentation

Maintained contact model - A highly reliable magnet actuated proximity limit switch designed to maintain contact for high speed stacker cranes, slow down and memory applications. Eliminates camming required for mechanically operated limit switches. **Maintains the information even if power is down**.

Features

- Diecast zinc housing
- PLC compatibility
- High transient protection
- No bouncing
- 0.5 in. (12.7 mm) NPT conduit entrance
- UL recognized

When the north or south pole of a magnet actuator moves past the blue-dot sensitive area within the specified range along the switch, the contact position changes from open to closed. Once latched, the movement of the same magnetic pole in the opposite direction - or the movement of the opposite magnetic pole in the same direction - unlatches the switch.

NOTE: If during this procedure the switch closes and then opens again (pulses), reverse the polarity of the magnet and repeat the above procedure. If the desired direction of operation is opposite to that established above, reverse the polarity of the magnet.

Magnet actuated proximity sensors

Circuit Type	AC ratings (inductive or resistive)			Leakage (mA)	Reference
	VA (max.)	Voltage (nom.)	Current (max.)		
Triac, AC					
1 NO	360	120	3.0 A	1.7	**SG08026**
Triac, AC low temperature: -34° C to +29° C (-30° F to 85° F)					
1 NO	360	120	3.0 A	1.7	**SG08110**

Compatible magnet actuators, see page 12

Proximity sensors
SG range
Magnet actuated sensors
Maintained contact

Dimensions
SG08026, SG08110

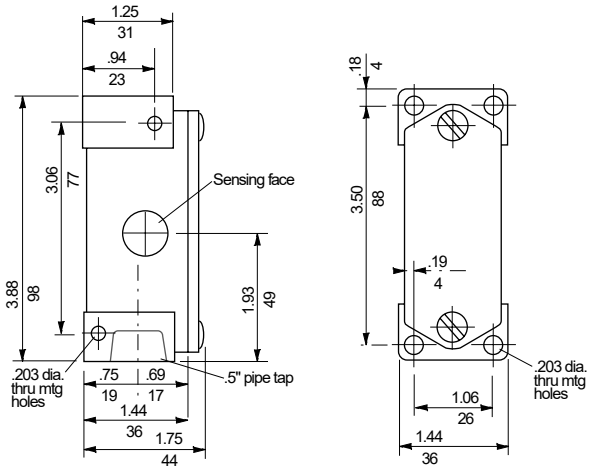

Dual Dimensions inches / mm

Proximity sensors
SG range
Magnet actuated sensors
Magnet actuators


7046


7093

Features

- Industrial grade magnet is recommended for magnet actuated-proximity sensors.
- Alnico is used as magnet material for all rigid models.
- Aramid fiber is used for the flexible magnetic tape.
- The rigid models are already mounted on several types of standard brackets for convenience (except the tubular high power version).
- Both South and North Poles are accessible and marked. The South Pole version is the standard. North Pole versions may be required in conjunction with the maintained magnetic switch.
- For comparison an average magnetic strength rating is listed below. Measurements were made with a Gaussmeter at 0.13 in. (3.3 mm) from the sensing surface.

Magnet actuators

	Magnetic Strength	Reference
Tubular format actuator	700 Gauss	**7046**
Flat bracket format actuator, center, south pole	330 Gauss	**7093**
Flexible tape format actuator - 1 foot (305 mm) long	180 Gauss	**7096** *(1)*

(1) For longer tape, specify the total length in feet. Example: 7096100 = 100 feet

Nominal sensing ranges

Reference	7096	7046	7093
SG08003	0.3 in. (33 mm)	1.3 in. (33 mm)	0.7 in. (17.8 mm)
SG08026	0.5 in. (13 mm)	1.3 in. (33 mm)	1.0 in. (25 mm)
SG08110	0.5 in. (13 mm)	1.3 in. (33 mm)	1.0 in. (25 mm)
SG08168	0.3 in. (33 mm)	1.3 in. (33 mm)	0.7 in. (17.8 mm)
SG18004	0.3 in. (33 mm)	1.3 in. (33 mm)	0.7 in. (17.8 mm)
SG28195	0.2 in. (5.1 mm)	1.0 in. (25.4 mm)	0.4 in. (10.0 mm)
SGA8005	0.3 in. (33 mm)	1.3 in. (33 mm)	0.7 in. (17.8 mm)
SGA8016	0.3 in. (33 mm)	1.3 in. (33 mm)	0.7 in. (17.8 mm)
SGA8031	0.3 in. (33 mm)	1.3 in. (33 mm)	0.7 in. (17.8 mm)
SGA8038	0.1 in. (2.5 mm)	0.8 in. (20.3 mm)	0.4 in. (10.0 mm)
SGA8057	0.1 in. (2.5 mm)	0.8 in. (20.3 mm)	0.4 in. (10.0 mm)
SGA8072	0.1 in. (2.5 mm)	0.8 in. (20.3 mm)	0.4 in. (10.0 mm)
SGA8176	0.3 in. (33 mm)	1.3 in. (33 mm)	0.7 in. (17.8 mm)
SGA8177	0.3 in. (33 mm)	1.3 in. (33 mm)	0.7 in. (17.8 mm)
SGA8179	0.1 in. (2.5 mm)	1.2 in. (30.5 mm)	0.5 in. (12.7 mm)
SGA8180	0.3 in. (33 mm)	1.3 in. (33 mm)	0.7 in. (17.8 mm)
SGA8182	0.3 in. (33 mm)	1.3 in. (33 mm)	0.7 in. (17.8 mm)
SGC8025	0.2 in. (5.1 mm)	1.0 in. (25.4 mm)	0.4 in. (10.0 mm)
SGC8027	0.2 in. (5.1 mm)	0.9 in. (23 mm)	0.4 in. (10.0 mm)
SGC8058	0.1 in. (2.5 mm)	0.8 in. (20.3 mm)	0.4 in. (10.0 mm)
SGC8178	0.3 in. (33 mm)	1.3 in. (33 mm)	0.7 in. (17.8 mm)

Proximity sensors
SG range
Magnet actuated sensors
Magnet actuators

Dimensions

Tubular magnet actuator 7046

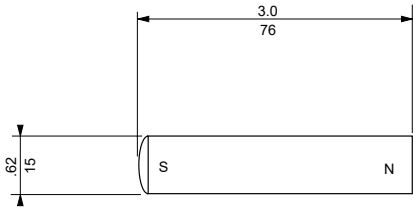

Magnet actuator 7093 (south pole)

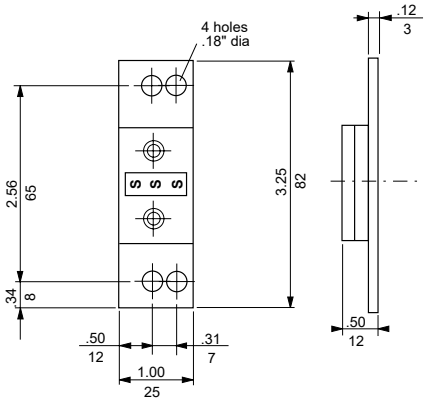

Flexible magnetic tape 7096 1 foot

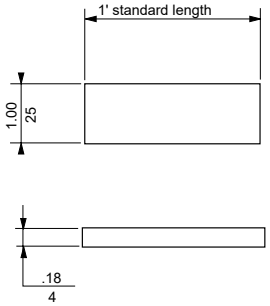

Dual Dimensions inches / mm

Proximity sensors
ST range
Grounded probe switch



ST08164

Presentation

The touch switch is a highly reliable AC solid state presence sensor designed for precise conductivity sensing. Applications include high temperature environment, light conductive, aggressive mechanical and chemical environments that targets positive end-point sensing. All models have a visible neon pilot light to indicate operation of the switch.

Features

- Housings - zinc die cast
- Solid state - no moving parts
- 115 Vac completely self-contained
- Probes up to 10 feet long
- High current output - no relay required for most applications
- Fast response - no warm-up time
- 0.5” NPT conduit entrance
- UL Recognized

Operation

The switch is actuated when a conductive path between probe terminal and ground (1 MΩ or less) is established. The electrical contact to ground operates the switching thyristor. Internal RC snubber and varistor provide effective protection from typical transients. Normal open models have a 10 millisecond (maximum) turn on time. Different off delay times are offered in order that the design engineer may compensate for relay chatter when the probe is subjected to “bounce” from irregular contact with the grounded metal point of contact.

NOTE: For isolated circuits where the ground is not common - the switch ground terminal should be connected to the neutral. The metal target to be detected by the probe should then be wired also to the neutral

Probe characteristics

The probe terminal is an 8-32 stud protruding from the center of the head. Extensions may be any **electrically conductive wire** or material suitably **insulated from grounded** surface and **limited in length to 10 feet** or less.

- Open voltage: 12 Vdc
- Peak current: 1 mA

Switch models

Circuit Type	Voltage nominal	Current load (nom.)	Leakage current (max.)	On delay	Off delay	Reference
Terminal screws						
NO	120 Vac	3 Amp	1.7 mA	10 ms	100 ms	**ST08164**
NO	120 Vac	3 Amp	1.7 mA	10 ms	400 ms	**ST08166**
Pre wired with 3 feet of cable						
NO	120 Vac	3 Amp	1.7 mA	10 ms	100 ms	**ST08001**

Proximity sensors
ST range
Grounded probe switch

Characteristics

General	
Temperature range	-40° F to +158° F (-40° C to +70° C)
Enclosure ratings	NEMA Types 1, 4, 13
Voltage drop	2 V
Inrush current maximum	10 Amp
Minimum load current	15 mA
Power supply current (no load)	30 mA
Cable	3' 16-4 SJTO or terminal screws #16 AWG

Wiring schemes

Cable Wiring

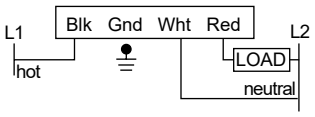

Target connected to ground

Terminal strip wiring

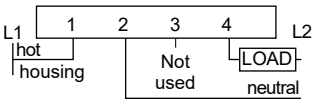

Target connected to ground
Housing must be grounded for proper operation.

Model ST switches may be wired in series or parallel. Connect red lead to black lead of other switch (terminal 4 to terminal 1 of other switch) for series operation. The voltage drop across each switch (in the closed state) does not exceed 2 volts AC.

Dimensions

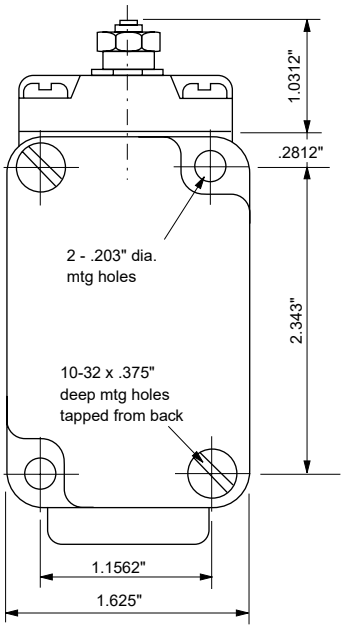

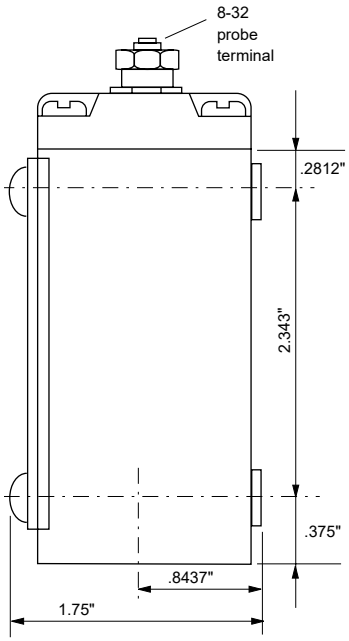

Dual Dimensions inches / mm

Product reference index

SG	
SG08003	6 7 12
SG08026	10 11 12
SG08110	10 11 12
SG08168	4 5 12
SG0L8003	6 7
SG18004	6 7 12
SG1L8004	6 7
SG28195	4 5 12
SGA8005	6 7 12
SGA8006	7
SGA8016	4 5 12
SGA8031	4 5 12
SGA8038	8 9 12
SGA8040	7
SGA8057	8 9 12
SGA8058	8
SGA8072	8 9 12
SGA8176	4 5 12
SGA8177	4 5 12
SGA8179	8 9 12
SGA8180	8 9 12
SGA8181	9
SGA8182	4 5 12
SGC8025	6 7 12
SGC8027	6 7 12
SGC8058	9 12
SGC8072	9
SGC8178	8 9 12
SGC8181	9
SGS8027	7
ST08001	14
ST08164	14
ST08166	14

www.telemecaniquesensors.com

The information provided in this catalogue contains description of products sold by TMSS France, its subsidiaries and other affiliated companies ('Offer') with technical specifications and technical characteristics of the performance of the corresponding Offer.

The content of this document is subject to revision at any time without notice due to continued progress in methodology, design and manufacturing.

To the extent permitted by applicable law, no responsibility or liability is assumed by TMSS France, its subsidiaries and other affiliated companies for any type of damage arising out of or in connexion with (a) informational content of this catalogue not conforming with or exceeding the technical specifications, or (b) any error contained in this catalogue, or (c) any use, decision, act or omission made or taken on the basis of or in reliance on any information contained or referred to in this catalogue.

NEITHER TMSS FRANCE, ITS SUBSIDIARIES, NOR ITS OTHER AFFILIATES, AS THE CASE MAYBE, MAKE NO WARRANTY OR REPRESENTATION OF ANY KIND, WHETHER EXPRESS OR IMPLIED, AS TO WHETHER THIS CATALOGUE OR ANY INFORMATION CONTAINED THEREIN SUCH AS PRODUCTS WILL MEET REQUIREMENTS, EXPECTATIONS OR PURPOSE OF ANY PERSON MAKING USE THEREOF.

Telemecanique™ Sensors is a trademark of Schneider Electric Industries SAS used under license by TMSS France. Any other brands or trademarks referred to in this catalogue are property of TMSS France or, as the case may be, of its subsidiaries or other affiliated companies. All other brands are trademarks of their respective owners.
This catalogue and its content are protected under applicable copyright laws and provided for informative use only.
No part of this catalogue may be reproduced or transmitted in any form or by any means (electronic, mechanical, photocopying, recording, or otherwise), for any purpose, without the prior written permission of TMSS France. Copyright, intellectual, and all other proprietary rights in the content of this catalogue (including but not limited to audio, video, text, and photographs) rests with TMSS France, its subsidiaries, and other affiliated companies or its licensors. All rights in such content not expressly granted herein are reserved. No rights of any kind are licensed or assigned or shall otherwise pass to persons accessing this information.

As standards, specifications and design change from time to time, please ask for confirmation of the information given in this publication.

©2025, TMSS France, All Rights Reserved.

TMSS France SAS
Share capital: 366 931 214 €
Tour Eqho, 2 avenue Gambetta
92400 Courbevoie – France
908 125 255 RCS Nanterre

TMSS US LLC
1875 Founders Drive
Kettering, Ohio 45420-4017 / United States of America
customer-support-NA@tesensors.com

January 2025 - V1.0

TESEBRO000317EN